THIS DRAWING IS UNPUBLISHED. RELEASED FOR PUBLICATION -,- .
© COPYRIGHT - By - ALL RIGHTS RESERVED.

LOC	DIST
AF	50

REVISIONS

P	LTR	DESCRIPTION	DATE	DWN	APVD
	K	REVISED PER ECR-12-013459	28NOV2012	KH	PD

1 CONTINUOUS STRIP ON REELS.

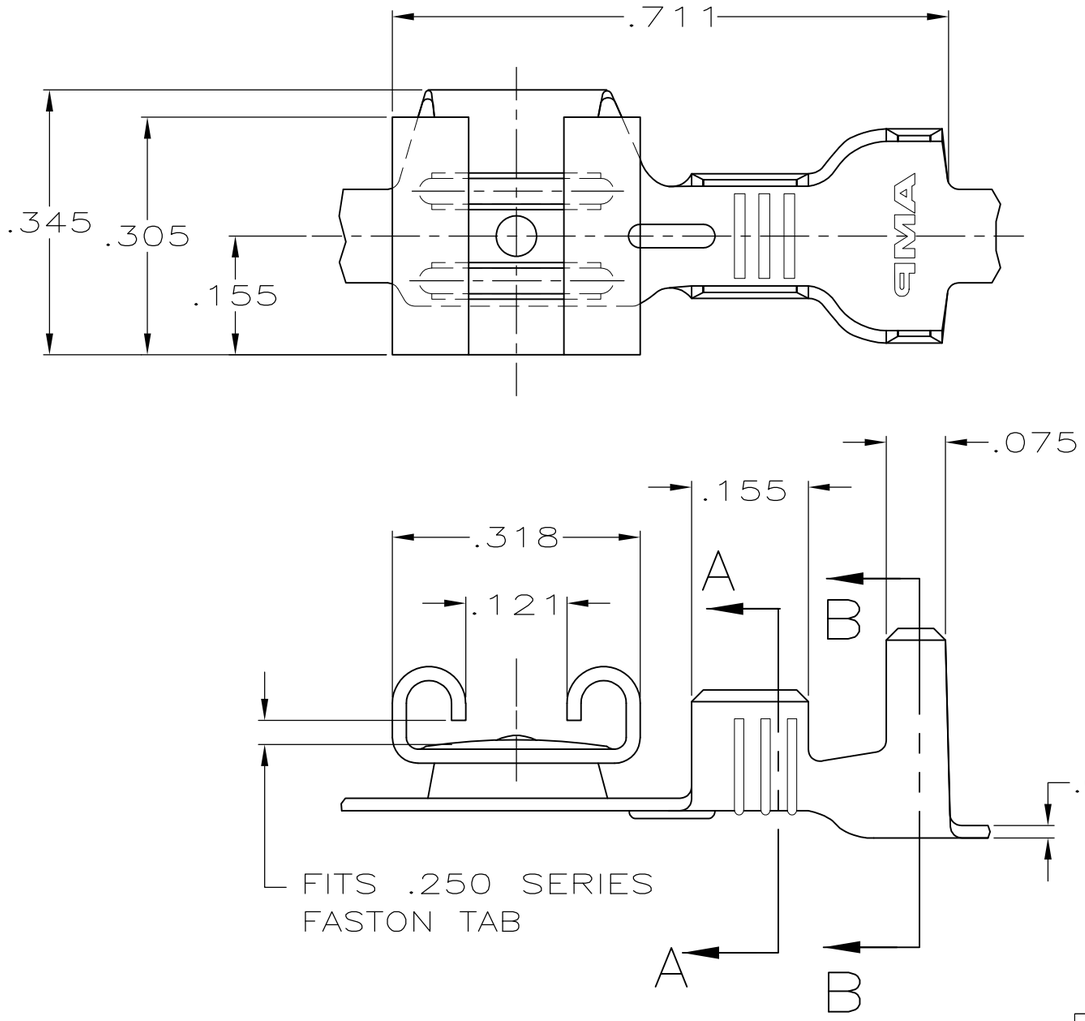

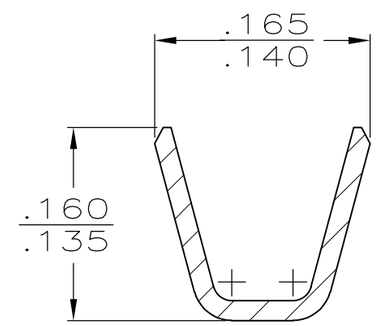

SECTION A-A
SCALE 8:1

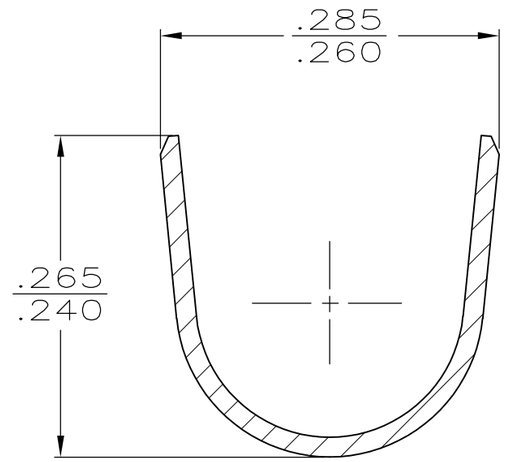

SECTION B-B
SCALE 8:1

	FINISH	INSUL RANGE	WIRE SIZE	MATING TAB THK ±.001	PART NO
	TIN	.170-.220	18-14	.032	60764-2
OBSOLETE	-	.170-.220	18-14	.032	60764-1

THIS DRAWING IS A CONTROLLED DOCUMENT.

DIMENSIONS: INCHES

TOLERANCES UNLESS OTHERWISE SPECIFIED:

0 PLC	± -
1 PLC	± -
2 PLC	± -
3 PLC	± .015
4 PLC	± -
ANGLES	± -

MATERIAL: BRASS

FINISH: SEE TABLE

DWN JR RUTH 2/28/90
CHK MS FEHER 2/28/90
APVD C MEYERS 2/28/90
PRODUCT SPEC —
APPLICATION SPEC 114-2032
WEIGHT —

TE Connectivity

NAME: RECEPTACLE, FASTON, FLAG,™ REVERSIBLE, .250 SERIES

SIZE	CAGE CODE	DRAWING NO	RESTRICTED TO
A3	00779	C-60764	—

CUSTOMER DRAWING | SCALE 5:1 | SHEET 1 OF 1 | REV K