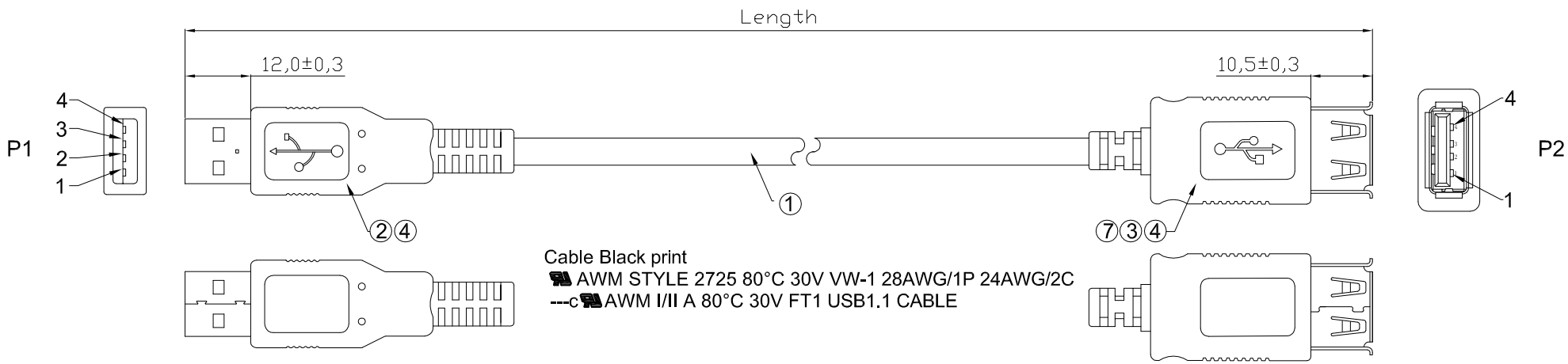

PE Bag Packing

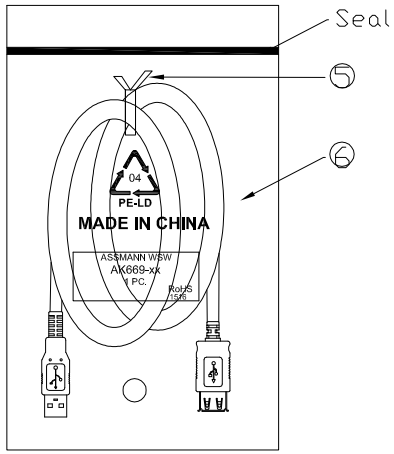

PIN ASSIGNMENT

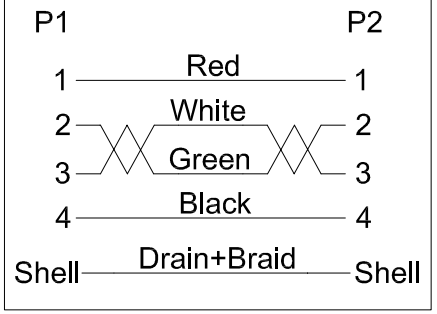

WSW P/N	Jacket color	Length(mm)
AK669-18	Beige	1800±50
AK669-30	Beige	3000±50
AK669-50	Beige	5000±50

Electrical test:
1. 100% short, open, miss wire test
2. Conduct resistance: 2 Ohm max.
3. Insulator resistance: 5Mohm min.
4. Dielectric test: DC 300V

NO.	NAME.	Q'TY	SPECIFICATION
⑦	Inner Jacket	NA	LD-PE
⑥	PE Bag	1	Clear Print black "MADE IN CHINA"+ "1PC"
⑤	TIE	1	White
④	Out Jacket	NA	PVC-45P Beige(BG002)
③	CONN	1	USB A Female Shell:Nickel Pin:G/F Insulator color:White, short type
②	CONN	1	USB A Male Shell:Nickel Pin:G/F Insulator color:White
①	Cable	1	USB1.1 UL2725 28#/1P+24#/2C+AEB OD:4.7mm Beige(BG002)

RoHS compliant
Unit: mm

Scale	Free
TOLERANCE	
DIM	TOL
Angle	TOL

Id.	Modification	Date	Name
⓪	Drawn	09.05.2016	Amy

	Date	Name
Drawn	09.05.2016	Amy
Approved	09.05.2016	Amy

ASSMANN WSW components

Customer-No.

ASSMANN WSW-No. AK669-xx

Drawing-No. ASS 7640 CA

rev00

Replace

Sheet