THIS DRAWING IS UNPUBLISHED. RELEASED FOR PUBLICATION 20
© COPYRIGHT 20 BY - ALL RIGHTS RESERVED.

Creo Parametric 3.0
DO NOT REVISE EXCEPT BY CAD

REVISIONS

P	LTR	DESCRIPTION	DATE	DWN	APVD
	A3	OBSOLETE -4 ECO-09-005893	10AUG2009	NCL	SHA
	B	REVISED DESIGN ECO-10-001844	02FEB2010	NCL	SHA
	B1	REVISED DRAWING ECO-17-001593	14JUL2017	NCL	NMS
	B2	REVISED BY ECN-23-226383	14AUG2023	MJI	NMS

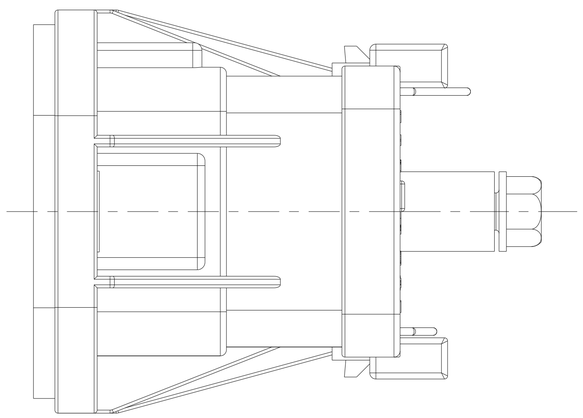

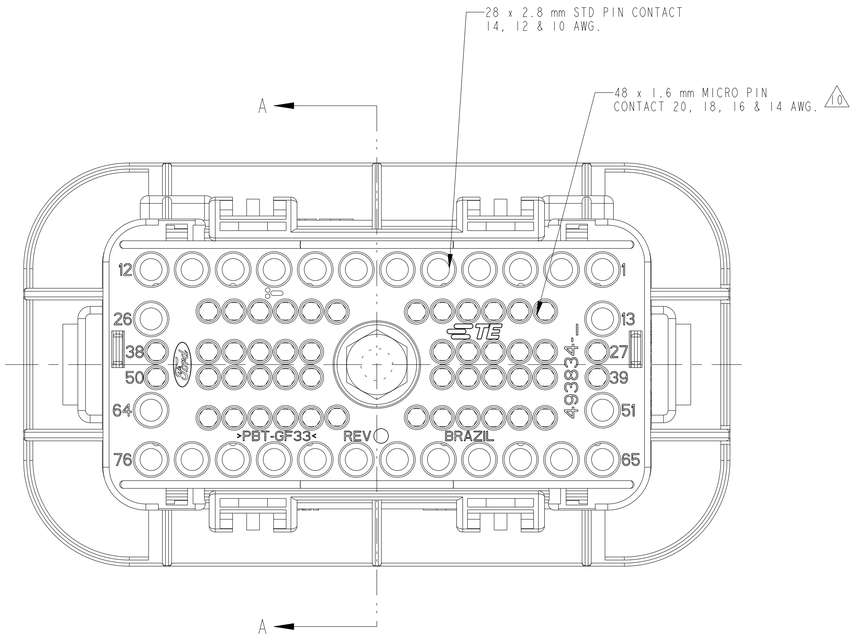

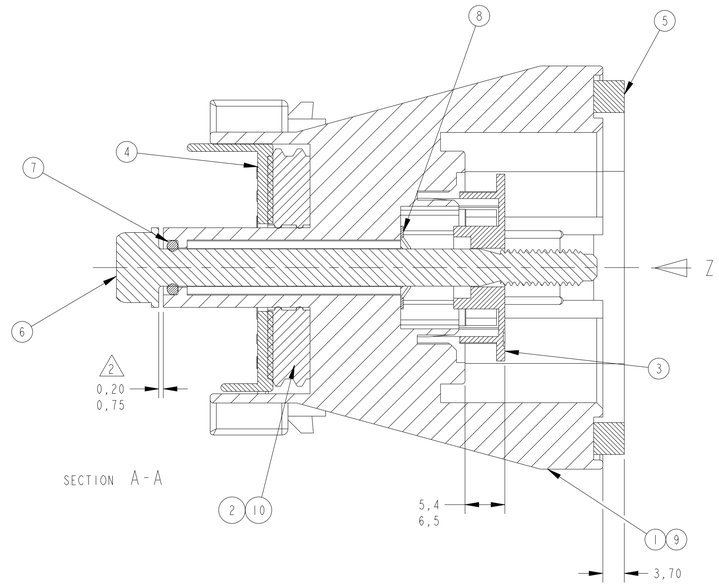

SECTION A-A

1 - PARA ASSEGURAR A COMPATIBILIDADE FUNCIONAL ENTRE AS PEÇAS,ELAS DEVEM SER FERRAMENTADAS JUNTAS E MANUFATURADAS POR UM MESMO PROVEDOR.

2 - PARAFUSO ITEM 6, DEVE GIRAR LIVREMENTE APÓS INSTALAÇÃO DA TRAVA ITEM 8.

3 - POLARIZAÇÃO "KEY A"

4 - POLARIZAÇÃO "KEY B"

5 - 1599186 (HSG ASSY 76 POSN SOCKET CONTACT) DEVE MONTAR COM 1599185 (HSG ASSY 76 POSN PIN CONTACT) APROPRIADAMENTE.

6 - A TRAVA ITEM 8 DEVE SUPORTAR 2,224 KN EMPURRANDO O PARAFUSO NO SENTIDO Z

7 - O CONECTOR DEVE SER TOTALMENTE ENCAIXADO USANDO TORQUE DE 4,8 ± 0,8 Nm NO PARAFUSO.

8 - OS CONECTORES SELADOS DEVEM ATENDER AO TESTE DE VEDAÇÃO CONFORME IEC-60529-IPX4.

9 - PARA EXTRAÇÃO DO TERMINAL UTILIZAR FERRAMENTA CONFORME TE SPEC 411-37031

10 -NAO USAR FIO DE 20 AWG ISOLAÇÃO FINA (EXCETO CABO RAYCHEM 55E 0,50mm²-DIA EXTERNO 1,21-1,31mm,PARA PN 1599185-3, CAVIDADES 1,6mm)

11 - SOMENTE PROTOTIPO

1 - TO ENSURE FUNCTIONAL COMPATIBILITY BETWEEN PARTS THEY MUST BE TOOLED TOGETHER AND MOLDED BY A SINGLE SOURCE.

2 - BOLT ITEM 6, MUST ROTATE FREELY AFTER INSTALLATION OF NUT, ITEM 8.

3 - POLARIZATION "KEY A"

4 - POLARIZATION "KEY B"

5 - 1599186 (HSG ASSY 76 POSN SOCKET CONTACT) MUST MATE PROPERLY WITH 1599185 (HSG ASSY 76 POSN PIN CONTACT).

6 - RETAINER M6.0 (ITEM 8) MUST WITHSTAND A PUSH OUT FORCE ON THE BOLT OF 2.224 KN IN THE DIRECTION OF ARROW "Z"

7 - PARTS MUST FULLY MATE USING 4.8 ± 0.8 Nm TORQUE ON BOLT.

8 - SEALED CONNECTORS SHALL ATTEND SEAL PERFORMANCE TEST ACCORDING TO IEC 60529 IPX4.

9 - FOR TERMINAL EXTRACTION TOOL SEE TE SPEC 411-37031

10 - DO NOT USE 20 AWG THIN WALL INSULATION WIRE (EXCEPT BY RAYCHEM 55E 0,50mm² CABLE OD 1,21-1,31mm, FOR PN 1599185-3, 1,6mm CAVITIES)

11 - PROTOTYPE ONLY

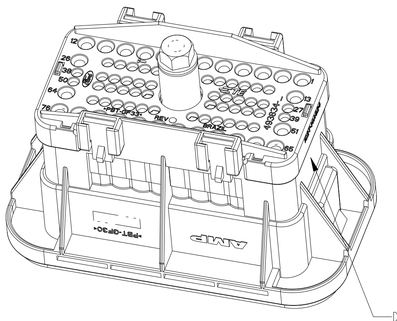

PERSPECTIVE VIEW
SCALE 1:1

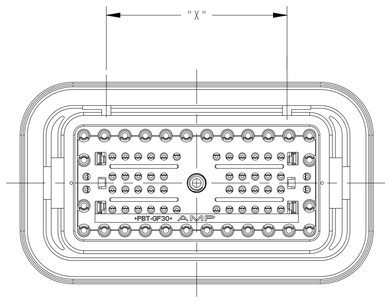

SCALE 1:1

DATE CODE
XXXXXXX-X / XXXXXX
I.D. NO.
COMPONENT CHANGE
SHIFT
DAY
MONTH
YEAR

4	B	71,5	1599185-2
4	B	71,5	1599185-2
4	B	71,5	1599185-2
3	A	59,00	1599185-1
	KEY	"X"	PART NUMBER
	POLARIZATION		

76	75	74	73	72	71	70	69	68	67	66	65	64	63	62	61	60	59	58	57	56	55	54	53	52	51	50	49	48	47	46	45	44	43	42	41	40	39	38	37	36	35	34	33	32	31	30	29	28	27	26	25	24	23	22	21	20	19	18	17	16	15	14	13	12	11	10	9	8	7	6	5	4	3	2	1	TOTAL OPEN HOLES	PART NUMBER