NOTES:

1. THIS HOUSING FOR USE WITH MOLEX (2,39)/.093 DIA. MALE TERMINALS.
2. MOUNTING EARS OPTIONAL (SEE CHART).

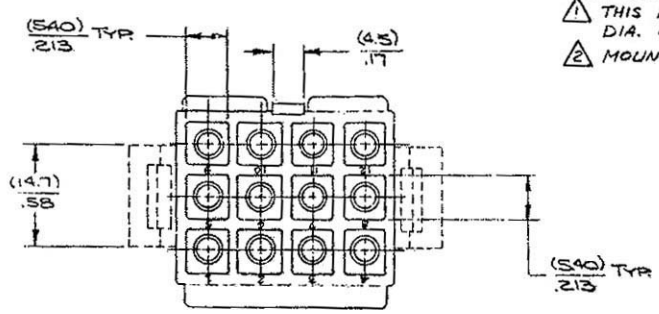

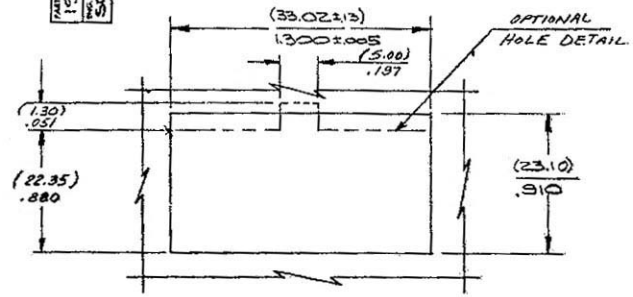

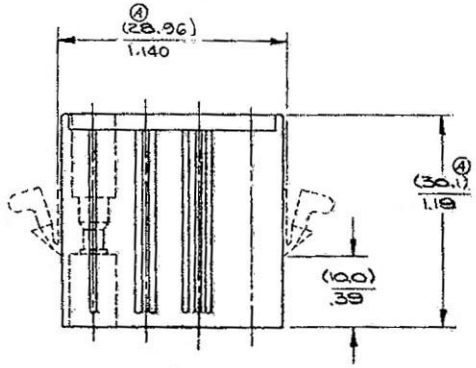

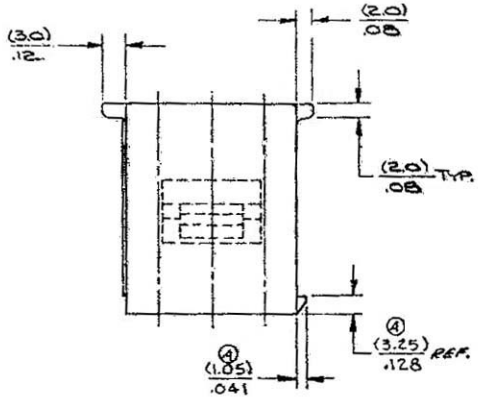

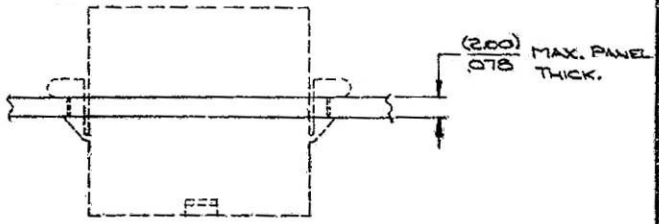

MOUNTING HOLE DETAIL

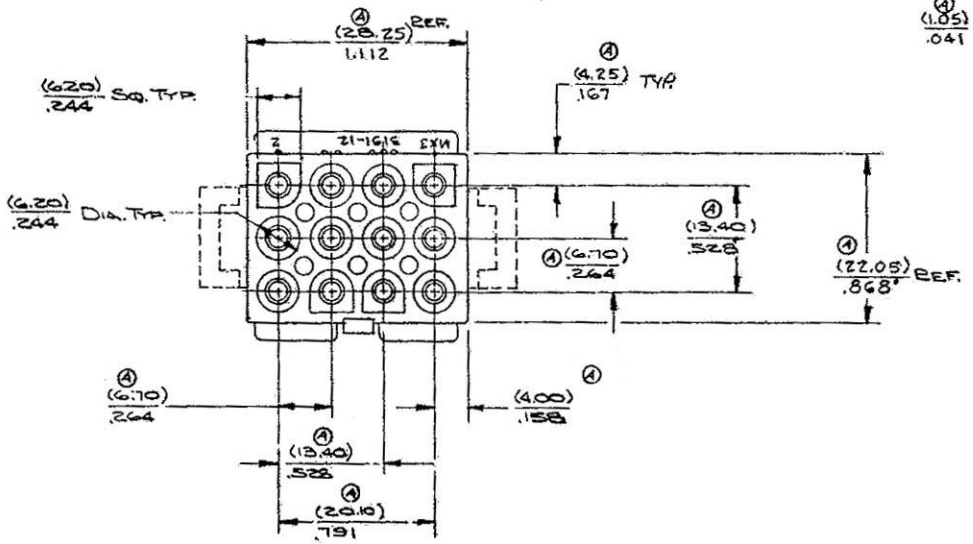

PART NO.	ENG. NO.	MTG. EARS	MATERIAL
NOT TOOLED	SDX-3191-12P 1-D	NO	NYLON 6/6, 94V-2, COLOR: NATURAL
NOT TOOLED	SDX-3191-12P -D	YES	(-D INDICATES DYED)
19-09-4121	SD-3191-12P -203	YES	ASAHILEONA FR-200
19-09-4122	SD-3191-12P 1-203	NO	ASAHILEONA FR-200
NOT TOOLED	SDX-3191-12P 1-202	YES	MOD. NYLON 6/6 94V-0 DUPONT FE-3016
NOT TOOLED	SDX-3191-12P -202	NO	MOD. NYLON 6/6 94V-0 DUPONT FE-3016
NOT TOOLED	SDX-3191-12P 1-200	TES	MOD. NYLON 6/6 94V-0 MONSANTO M340
NOT TOOLED	SDX03191-12P -200	NO	MOD. NYLON 6/6 94V-0 MONSANTO M340
19-09-2126	SD-3191-12P 1-201	NO	MOD. NYLON 6/6 94V-0 WELLAMID FR22-FN
19-09-2127	SD-3191-12P -201	YES	MOD. NYLON 6/6 94V-0 WELLAMID FR22-FN
19-09-2129	SD-3191-12P 1	NO	NYLON TYPE 6/6 94V-2
19-09-2128	SD-3191-12P	YES	NYLON TYPE 6/6 94V-2

REVISIONS

LTR.	DESCRIPTION	DATE	APPD
D1	ADD DYED PARTS 3191-12P-1-D, 3191-12P-D, 6-5-85 JCS		
D	FINAL RELEASE - PER 13-09-4121 & 13-09-4122 9-6-85		
C1	ADDED NEW MATL. PER ECO 9693		
C	ADD MOLE 12-17-87		
B	X-RELEASE 11-13-74 ECO NO. 88910		
A	FINAL RELEASE 3-15-68		
1	REL. NO. 4-2-74 11/21/74		

DIMENSION SHOWN (MILLIMETER/INCH)
UNLESS OTHERWISE SPECIFIED TOLERANCES:
MOLD: 3 PLACE ±.010 / ±.25; 2 PLACE ±.014 / ±.35; ANGULAR ±1/2°
MTRC: 3 PLACE ±.005 / ±.13; 2 PLACE ±.010 / ±.25
SHALL APPLY WHERE APPLICABLE (NOT SHOWN WITH DIMENSIONS)
UNLESS OTHERWISE SPECIFIED
DO NOT SCALE DRAWING

DRWN BY: W.R.L. DATE:
APPD BY: DATE:
SCALE: 2X

TITLE: HOUSING - PLUG - 12 CIRCUIT (UNIVERSAL)

MOLEX INCORPORATED
LISLE, ILL. U.S.A.

DATE: 10/28/75

PART NO. 19-**-212*

DWG. NO. SD-3191-12P-*

C

AGEO

THIS DRAWING CONTAINS INFORMATION THAT IS PROPRIETARY TO MOLEX INC. AND SHOULD NOT BE USED WITHOUT WRITTEN PERMISSION.