CINCH Connectors Ltd. WORKSOP, ENGLAND	JA	77883	00	000	L00

RELEVANT SPEC.

SHEET 1 OF 1

CAD No. G:JA77883 \

IF IN DOUBT – ASK

ALL DIMENSIONS ARE IN mm

ROHS COMPLIANT

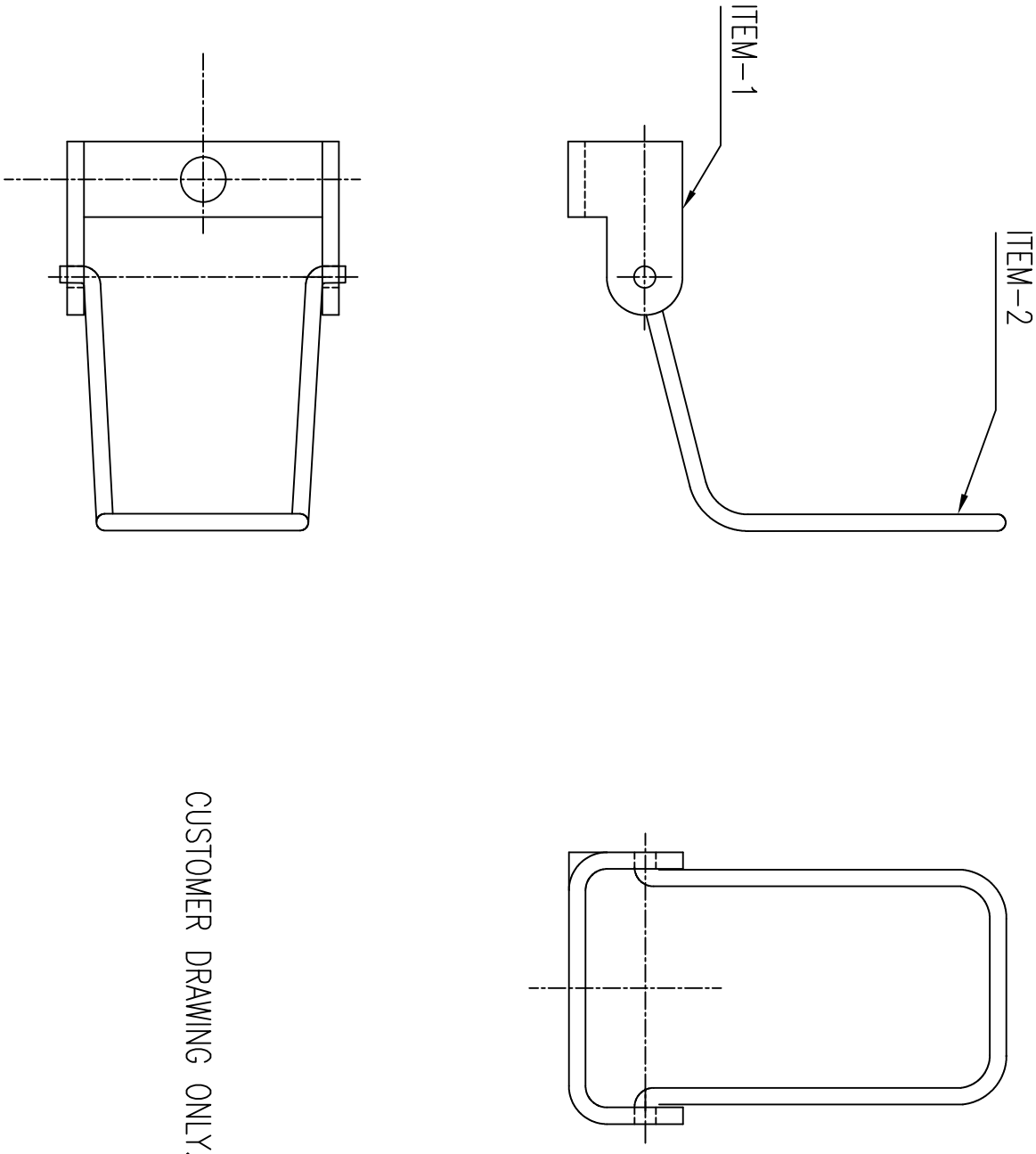

CUSTOMER DRAWING ONLY.

THIS DRAWING IS COPYRIGHT AND IS ISSUED ON CONDITION IT IS NOT COPIED, REPRODUCED OR DISCLOSED TO A THIRD PARTY WITHOUT THE CONSENT IN WRITING OF CINCH CONNECTORS LTD. ATTENTION IS DRAWN TO THE FACT THAT THE ARTICLE DISCLOSED MAY BE COVERED BY BRITISH OR FOREIGN PATENTS, GRANTED OR PENDING OR REGISTERED DESIGN.

CODE	DESCRIPTION	ITEM	FINISH	No. OFF
	CLIP	2		1
	BRACKET	1		1

APP'D		
DATE	A CUST ISS	26.04.57
	B D17159	26.09.13
MOD No.		
ISSUE		

GENERAL TOLERANCE

2 DECIMAL PLACES ± 0.10

1 DECIMAL PLACE ± 0.20

NO DECIMAL PLACE ± 0.50

ANGULAR ± 1°

0.18 MAX TOOLING RAD.

TITLE

4 WAY BRACKET AND SPRING CLIP ASSY

DRN. J.MADELEY	DATE 26.09.13	SCALE	CHD JNM
MATERIAL SPEC.			APP'D

RAW MATERIAL

FINISHED HARDNESS	FINISH TREATMENT	FINISHED COLOUR