Unit : mm

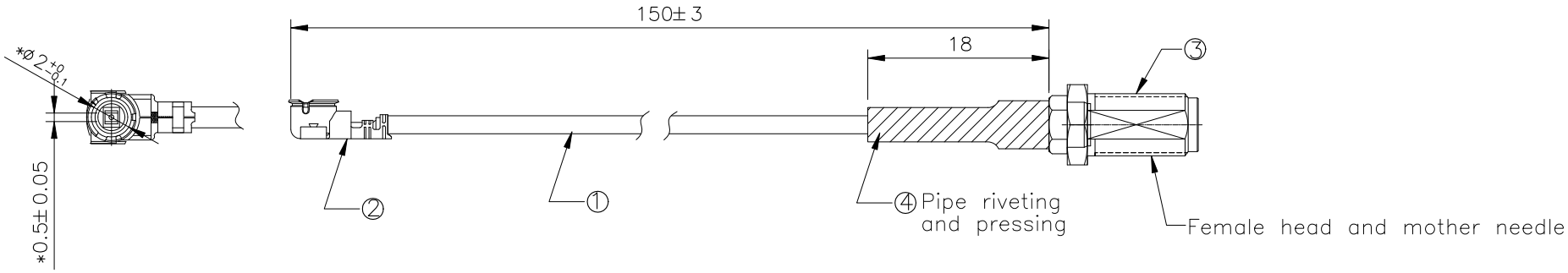

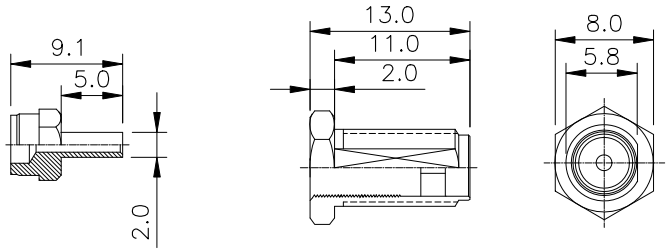

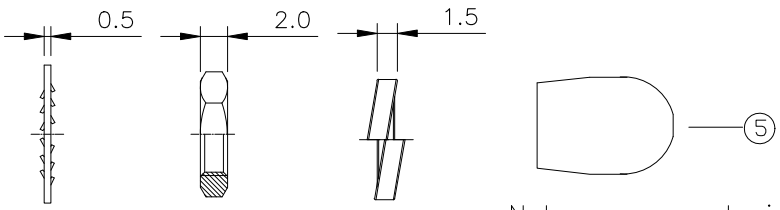

Huasi Nut Spring pad

Note: spare parts in bulk, one hundred and one bag

ELECTRICAR CHARACTERISTICS REQUIREMENTS:
1.Product must be 100% conductionr,open circuit short circuit test.
2.Conductive resistance：20Ω
3.Rated voltage: AC 60V
4.Withstand voltage: AC 200V
5.Insulation resistance:500m Ω
6.characteristic impedance：50Ω
7.Adopt environmental protection process and meet ROHS requirements
8. Tensile test: 1.5kg~
9. The general tolerance shall prevail if no tolerance is noted

RoHS Compliant

ITEM	PART No.	VENDOR	DESCRIPTION	Q'TY	OVERALL WIRE LENGTH
4	HEAT SHRINK SLEEVE	–	2.0*18MM BLACK HEAT SHEINK SLEEVE	1	–
3	SMA	–	11*1.78–ZYK–Back plug riveting and gold plating	1	–
2	IPEX	–	IPEX–1.78End of line	1	–
1	WIRE	–	RG1.78 BROWN–48–Double silver–PTFE	1	155

MATERIAL SPECIFICATION

SYM	NAME	DATE	REVISIONS
3			
2			
1			

DRAWN BY	CHECKED BY	APPROVED BY	CONFIRMED BY	DESCRIPTION
LuLu 08/21.20'	Iron 08/21.20'	Iron 08/21.20'	Waleed 08/21.20'	RF CABLE
				SHEET: 1 OF 1

瀚荃股份有限公司
CviLux Corporation

DRAWING No.	CviLux P/N	CUST. CODE
DH50631A	DH-20G50017	CUC
		CUSTOMER P/N
		–