DRAWING MADE IN THIRD ANGLE PROJECTION

680264 ⇨ 680264

<US161B>DEPTPROJB>U.1618>U.FTB

PART NUMBER	REV	FIRST USED
680264-1	A	122500-1
680264-2	A	565435-5
680264-3	A	354500-1

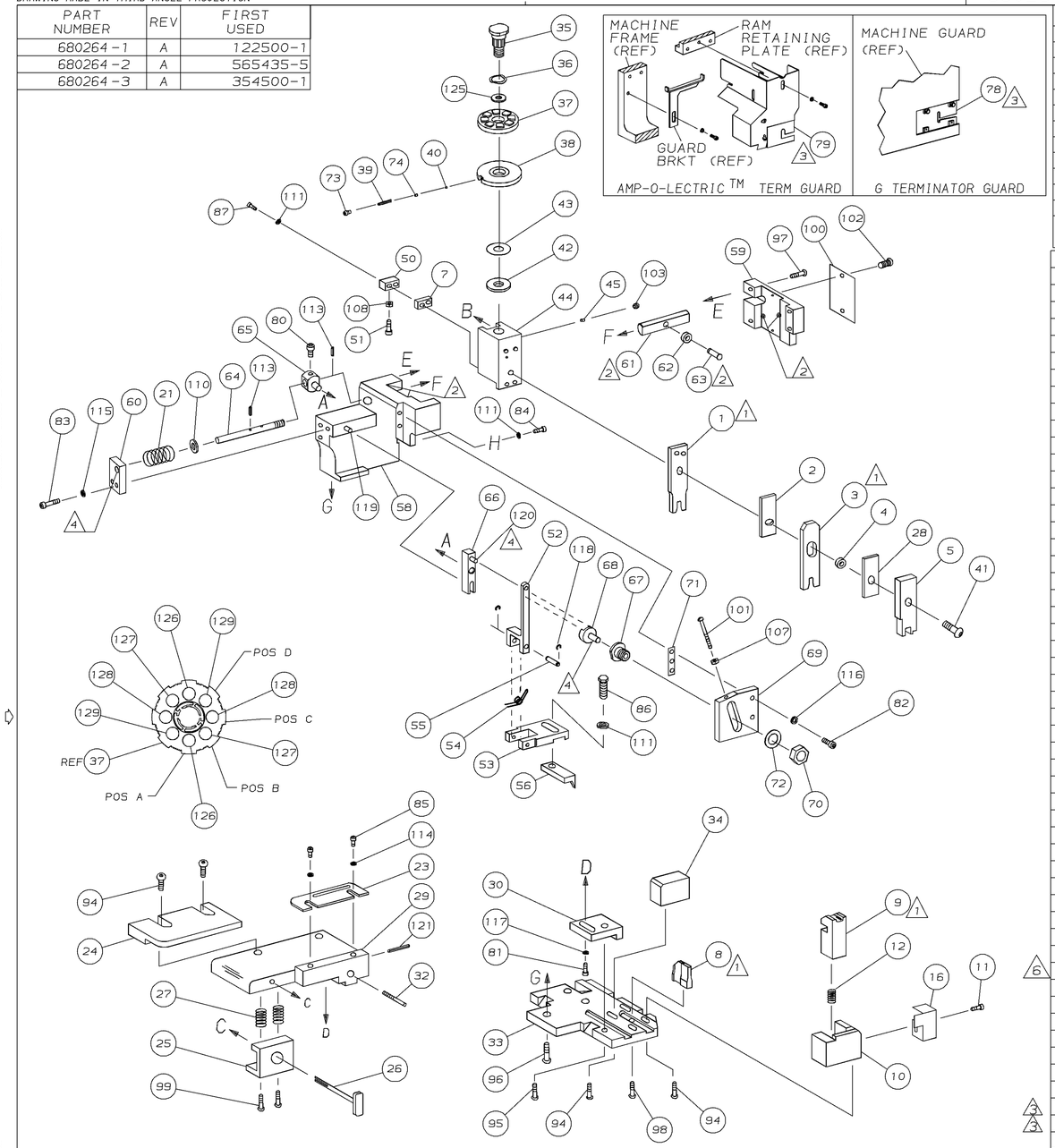

TERMINAL NAME: 2.8mm FASTIN FASTON™ TAB △7

SEAL		929949
828905		

CRIMPING DATA

PAD LTR	CRIMP HEIGHT	WIRE SIZE
A	.076 ±.002 [1.93 ±0.05mm]	2.5mm²
B	.070 ±.002 [1.79 ±0.05mm]	2mm²
C	.065 ±.002 [1.65 ±0.05mm]	1.5mm²
D	.059 ±.002 [1.50 ±0.05mm]	1mm²

CRIMP	SIZE	TYPE	RANGE
WIRE	.110 [2.79mm]	F	1-2.5mm²
INSUL	.145 [3.68mm]	O	.134 MAX

WIRE STRIP LENGTH	TERM APPL SPEC	FEED	APPL INSTRUCTION	SET UP GAGE	LAYOUT
–	–	.531	408-8040	458637-1	L1734

QTY REQD PER ASSY					PARTS LIST			
2	2	2	–	C	354779-8	PIN, WIRE DISC (.3030) D		129
2	2	2	–	C	9-354778-5	PIN, WIRE DISC (.2970) C		128
2	2	2	–	C	8-354778-3	PIN, WIRE DISC (.2910) B		127
2	2	2	–	C	7-354778-0	PIN, WIRE DISC (.2845) A		126
1	1	1	–	A	986950-1	WASHER, FLAT PRECISION		125
1	1	1	–	A	217238-1	DOCUMENTATION PACKAGE		124
1	1	1	–	–	4088040	SF APPL INST 408-8040		123
								122
1	1	1	–	A	4-21028-0	PIN, SLT SPR (ø.093x.75) ST GDE PL		121
REF	REF	REF	–	A	1-21030-1	PIN, DOWEL (ø.187x.50) LEVER		120
REF	REF	REF	–	A	1-21030-6	PIN, DOWEL (ø.187x1.25) HOUSING		119
REF	REF	REF	–	A	21045-3	RING, RET "C" (ø.187) FD FING PIN		118
1	1	1	–	A	21024-5	WASHER, LOCK (#10) ADJ BLOCK		117
REF	REF	REF	–	A	21024-5	WASHER, LOCK (#10) ADJ PLATE		116
REF	REF	REF	–	A	21024-5	WASHER, LOCK (#10) FEED GDE ROD		115
2	2	2	–	A	21024-2	WASHER, LOCK (#4) FRONT STP GUIDE		114
REF	REF	REF	–	A	5-21028-1	PIN, SLT SPR (ø.125x.50) ADJ ROD		113
								112
4	4	4	–	A	21024-4	WASHER, LOCK (#8) STRIPPER		111
REF	REF	REF	–	A	21899-4	WASHER, FLAT (ø5/16) SCREW ADJ		110
								109
1	1	1	–	A	21018-5	NUT, HEX (NO. 6) HOLDDOWN		108
REF	REF	REF	–	A	21018-5	NUT, HEX (6-32) FEED ADJ		107
								106
								105
1	1	–	–	A	992031-1	PIN, CLEVIS		104
1	1	1	–	A	21009-2	SCR, SKT SET (1/4-20x.25 LW) RAM		103
2	2	2	–	A	21017-2	SCR, DRIVE (#2x.19) ID PLATE		102
REF	REF	REF	–	A	6-23715-5	SCR, PAN HD (6-32x1.50) FEED ADJ		101
1	1	1	–	B	461264-1	PLATE, IDENTIFICATION		100
2	2	2	–	A	3-21002-0	SCR, BHC (10-32x.88) DRAG		99
1	1	1	–	A	22733-8	SCR, BHC (8-32x.38 LW) ANVIL		98
REF	REF	REF	–	A	2-21002-9	SCR, BHC (10-32x.75) CAP		97
REF	REF	REF	–	A	2-22733-8	SCR, BHC (1/4-20x.62) HOUSING		96
REF	REF	REF	–	A	2-21002-7	SCR, BHC (10-32x.50) SG ADJ BLOCK		95
6	6	6	–	A	2-21002-2	SCR, BHC (8-32x.50) TERM H DWN		94
								93
								92
1	1	1	–	A	1-21002-7	SCR, BHC (6-32x.38) CAM		91
								90
1	1	–	–	A	7-21000-8	SCR, SHC (4-40x.19) STRIPPER		89
								88
△6 2	2	2	–	A	2-21000-8	SCR, SHC (8-32x.58) DEP-HOLD		87
1	1	1	–	A	2-22603-0	SCR, HEX HD (8-32x.31) FEED FINGER		86
2	2	2	–	A	1-21000-3	SCR, SHC (4-40x.25) F ST GUIDE		85
1	1	1	–	A	2-21000-7	SCR, SHC (8-32x.50) STRIPPER		84
REF	REF	REF	–	A	3-21000-7	SCR, SHC (10-32x.75) FEED ROD GD		83
REF	REF	REF	–	A	3-21000-6	SCR, SHC (10-32x.62) FD ADJ BLK		82
1	1	1	–	A	3-21000-4	SCR, SHC (10-32x.38) SG ADJ BL		81
REF	REF	REF	–	A	3-21000-4	SCR, SHC (10-32x.38) PIVOT BLK		80
△3 –	REF	–	–	B	455749-1	GUARD, WINDOW		79
△3 REF	–	–	–	B	679532-1	INSERT, GUARD		78
								77
								76
								75
1	1	1	–	A	690603-1	SPRING, ASSIST		74
1	1	1	–	A	23030-1	SCR, SHC (6-32x.25 SL) INS DISC		73
REF	REF	REF	–	A	458109-1	WASHER, SPECIAL		72
REF	REF	REF	–	A	690517-1	SPACER		71
–3	–2	–1	U/M	DWG SIZE	PART NO	DESCRIPTION		ITEM NO

QTY REQD PER ASSY					PARTS LIST			
–1	LEADMAKER				MECH POST FEED			
–2	BENCH MODEL K				MECH PRE FEED			
–3	BENCH MODEL G				MECH PRE FEED			
REF	REF	REF	–	B	22594-8	NUT, HEX (1/2-20)		70
REF	REF	REF	–	B	240628-1	PLATE, ADJUSTMENT		69
REF	REF	REF	–	B	240626-1	SHAFT, PIVOT		68
REF	REF	REF	–	B	240633-1	BUSHING		67
REF	REF	REF	–	A	455680-1	LEVER, INTERMEDIATE		66
REF	REF	REF	–	B	240629-1	BLOCK, PIVOT	D	65
REF	REF	REF	–	A	240632-2	SCREW, ADJ FEED ROD		64
REF	REF	REF	–	B	240659-3	PIN, CAM ROLLER		63
REF	REF	REF	–	B	240658-1	ROLLER, CAM		62
REF	REF	REF	–	B	454398-2	ROD, FEED		61
REF	REF	REF	–	A	454178-1	GUIDE, FEED ROD		60
REF	REF	REF	–	C	454220-1	CAP, RAM		59
REF	REF	REF	–	D	454485-1	HOUSING		58
								57
1	1	1	–	B	690542-2	PAWL, FEED		56
REF	REF	REF	–	B	240624-1	PIN, FEED FINGER		55
REF	REF	REF	–	B	691499-1	SPRING, FEED FINGER		54
REF	REF	REF	–	B	690541-1	HOLDER, FEED FINGER		53
REF	REF	REF	–	A	455679-1	LEVER, TERMINAL FEED ARM		52
1	1	1	–	A	811242-2	BUMPER, HOLDDOWN		51
1	1	1	–	A	690753-1	SPACER, TONKER		50
1	–	–	–	B	690602-6	CAM, PRE-FEED 1 5/8 ST		49
–	1	–	–	B	690602-5	CAM, PRE-FEED 1 1/8 ST		48
–	–	1	–	B	690501-4	CAM, POST-FEED 1 5/8 ST		47
1	1	1	–	B	459456-1	APPLICATOR, BASIC (SUBASSY)		46
1	1	1	–	A	690191-1	PLUG, NYLON		45
1	1	1	–	C	455673-1	RAM		44
1	1	1	–	A	690125-1	WASHER, LAMINATED	C	43
1	1	1	–	A	690124-1	WASHER, RAM		42
1	1	1	–	A	7-21002-9	BOLT, CRIMPER (5/16x1.00)		41
1	1	1	–	A	23241-6	BALL, STEEL		40
1	1	1	–	A	690170-1	SPRING, COMPRESSION		39
1	1	1	–	C	690142-1	DISC, INSULATION		38
1	1	1	–	D	354777-1	WIRE DISC, PLASTIC		37
1	1	1	–	A	22480-5	WASHER, SPRING		36
1	1	1	–	B	690212-1	POST, RAM		35
1	1	1	–	B	690786-2	SUPPORT, TERMINAL		34
REF	REF	REF	–	D	455675-1	PLATE, BASE		33
1	1	1	–	A	690432-3	SCREW, ADJUSTMENT		32
								31
REF	REF	REF	–	B	455689-1	BLOCK, STRIP GUIDE ADJ		30
1	1	1	–	C	455671-1	PLATE, STRIP GUIDE		29
1	1	1	–	C	1-455888-9	SPACER, FRONT SHEAR DEP		28
2	2	2	–	A	1-22284-0	SPRING, DRAG		27
1	1	1	–	B	690546-1	LEVER, DRAG RELEASE		26
1	1	1	–	B	240792-1	DRAG, TERMINAL		25
1	1	1	–	D	7-690504-6	GUIDE, STRIP (REAR)		24
1	1	1	–	A	690438-1	GUIDE, STRIP (FRONT)		23
–	–	1	–	B	690472-2	STRIPPER		22
REF	REF	REF	–	A	4-22284-9	SPRING, FEED RETURN	B	21
1	1	–	–	A	679218-1	STRIPPER WIRE STOP ASSY		20
1	1	–	–	B	458949-1	STRIPPER		19
								18
								17
1	1	1	–	B	318563-1	GUARD, CHIP, FRONT		16
								15
								14
								13
1	1	1	–	A	5-22280-0	SPRING, SHEAR		12
1	1	1	–	B	690461-2	STOP, SHEAR		11
1	1	1	–	C	1-690459-0	HOLDER, SHEAR (FRONT)		10
△1 1	1	1	–	C	454276-5	SHEAR, FLOAT (FRONT)		9
△1 1	1	1	–	C	7-189717-0	ANVIL		8
1	1	1	–	C	1-240641-6	SPACER, DEPRESSOR (REAR)		7
								6
1	1	1	–	C	1-455889-8	DEPRESSOR, SHEAR (FRONT)		5
1	1	1	–	B	2-238011-2	SPACER, BLOCK CRIMPER		4
△1 1	1	1	–	C	6-683454-5	CRIMPER, INSULATION		3
1	1	1	–	C	1-455888-7	SPACER, CRIMPER		2
△1 1	1	1	–	C	456408-3	CRIMPER, WIRE		1
–3	–2	–1	U/M	DWG SIZE	PART NO	DESCRIPTION		ITEM NO

680264

A

REVISION OF EACH ASSY NO (WHEN BLANK, USE DWG REVISION)

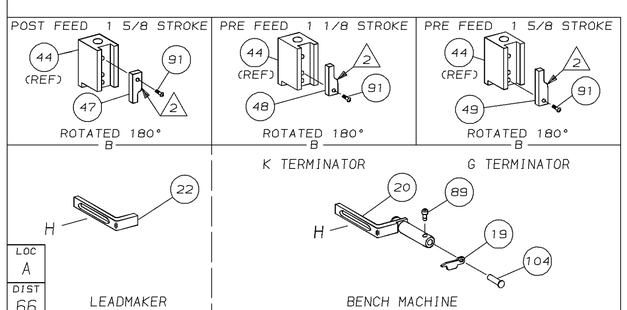

△1 RECOMMENDED SPARE PARTS.

△2 GREASE LIGHTLY.

△3 GUARD MUST BE IN PLACE WHEN OPERATING APPLICATOR IN A BENCH MACHINE.

△4 LUBRICATE DAILY USING NO. 20 MACHINE OIL.

5. ITEMS WITH QTY OF REF SPECIFIED (EXCEPT ITEMS 78 AND 79) ARE USED ON ITEM 46.

△6 CUT TO LENGTH AT ASSY

△7 APPLICATOR CRIMPS TERMINAL WITH A SEAL

P	F	LTR	REVISION RECORD	APP	DATE
		A	RELEASED	CE	4-96

DIMENSIONS IN INCHES.
DO NOT SCALE PRINT.
TOLERANCES UNLESS OTHERWISE SPECIFIED,
2 PLC DEC ±-
3 PLC DEC ±-
4 PLC DEC ±-
ANGLES ±-
SURF TEXTURE: √
REMOVE BURRS, BREAK SHARP EDGES R.015 MAX

MATL – –	HT TR – –	FIN – –	
DR P.MATHIAS 2-6-96	APP 2-6-96 T.ELBIN	AMP Incorporated Harrisburg, PA 17105-3608	
CHK 2-6-96 C.ERISMAN	REL 4/8/96 B. MORGAN		
NAME SIDE FEED HDM APPLICATOR		MACHINE REF MINI APPL	
SCALE –	D DWG NO 680264	SHEET 1 OF 1	REV A

THIS DRAWING IS A CONTROLLED DOCUMENT FOR AMP INCORPORATED. IT IS SUBJECT TO CHANGE AND THE CONTROLLING ENGINEERING ORGANIZATION SHOULD BE CONTACTED FOR THE LATEST REVISION.

THIS INFORMATION IS CONFIDENTIAL AND IS DISCLOSED TO YOU ON CONDITION THAT NO FURTHER DISCLOSURE IS MADE BY YOU TO OTHER THAN AMP PERSONNEL WITHOUT WRITTEN AUTHORIZATION FROM AMP INCORPORATED, HARRISBURG, PA.