3D MODEL: 747280001 PSM ASY

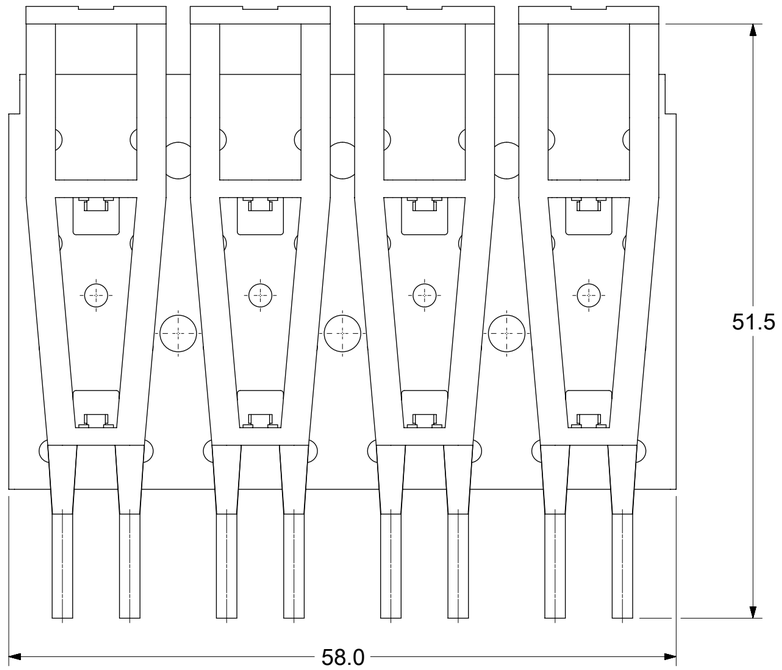

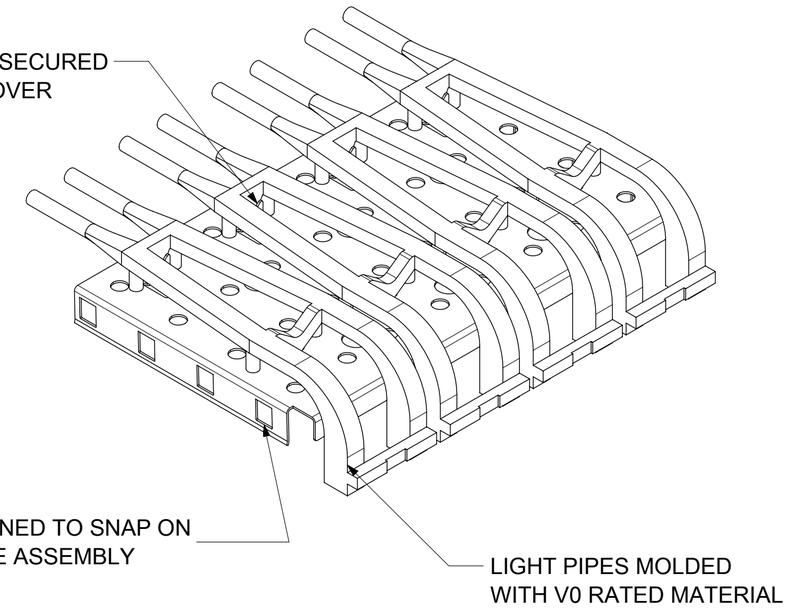

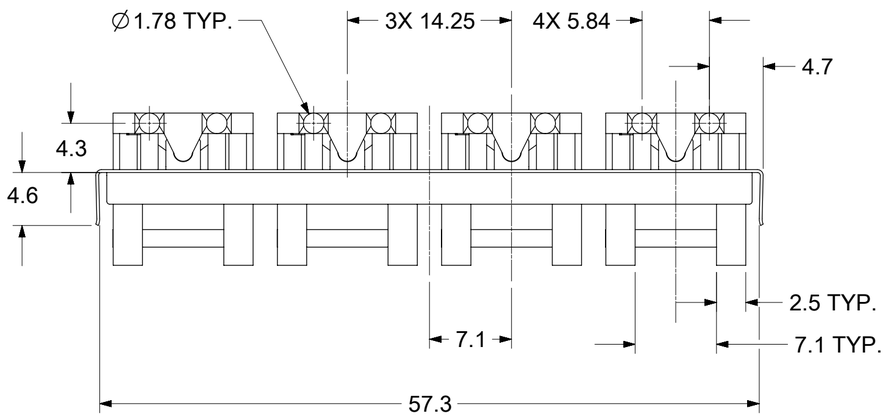

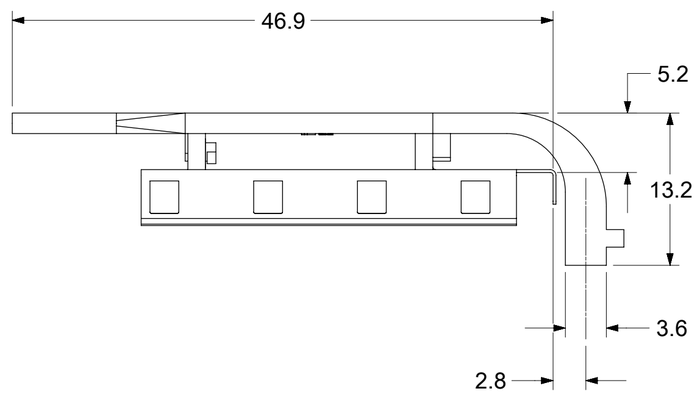

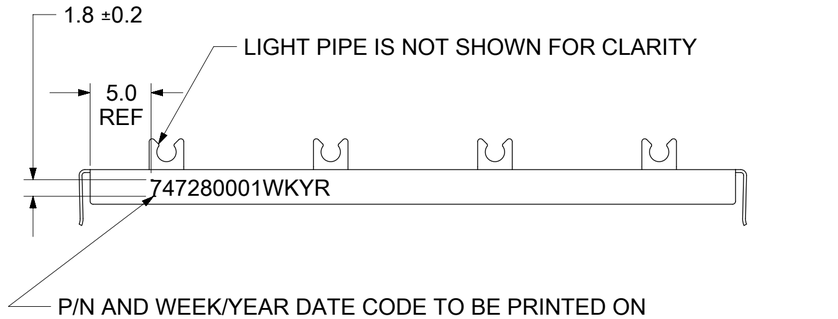

SEE TABLE BELOW FOR DATE CODE INFORMATION.

	WEEK / YEAR DATE CODE TABLE
WK	WEEK OF THE YEAR 01 THRU 52 OR 53 (EXAMPLE : 01 = FIRST WEEK OF YEAR, 52 OR 53 = LAST WEEK OF YEAR)
YR	22, 23, 24 ETC…. (EXAMPLE: YEAR 2022=22)

NOTES:

1. THIS LIGHT PIPE ASSEMBLY TO BE USED WITH THE FOLLOWING
   1X4 SFP CAGE ASSEMBLIES:
   747280411 - 1X4 SFP CAGE ASSEMBLY W/ PRESS FIT PINS,
   W/ 2.29 GASKET, F/ LIGHT PIPES
   (REFER TO DOCUMENT SD-74728-411)
   747280412 - 1X4 SFP CAGE ASSEMBLY W/ SOLDER POSTS,
   W/ 2.62 GASKET, F/ LIGHT PIPES
   (REFER TO DOCUMENT SD-74728-412)
   747280415 - 1X4 SFP CAGE ASSEMBLY W/ PRESS FIT PINS,
   W/ 2.62 GASKET, F/ LIGHT PIPES
   (REFER TO DOCUMENT SD-74728-415)
2. IT IS RECOMMENDED THAT THE CAGE ASSEMBLY BE PRESSED INTO OR SOLDERED TO THE PCB PRIOR TO ASSEMBLING THE LIGHT PIPE ASSEMBLY.
3. LED'S TO HAVE A MAXIMUM HEIGHT OF 1.4mm AND A MINIMUM HEIGHT OF 0.7mm
4. RECOMMENDED LED'S INCLUDE THE FOLLOWING MANUFACTURES:
   DIALIGHT: 597-77x1-5xx SERIES
   CHICAGO MINIATURE: 7016 SERIES
   KINGBRIGHT: APBL3025 SERIES (BICOLOR)
   APL3015 SERIES (SINGLE COLOR)
5. NO RoHS EXEMPTION

DOCUMENT STATUS	P1	RELEASE DATE	2022/07/05 15:04:34

THIS DRAWING CONTAINS INFORMATION THAT IS PROPRIETARY TO MOLEX ELECTRONIC TECHNOLOGIES, LLC AND SHOULD NOT BE USED WITHOUT WRITTEN PERMISSION

FUNCTIONAL SYMBOLS: FA = 0, FC = 0, FP = 0
DIVISIONAL SYMBOLS

DIMENSION UNITS	SCALE
mm	3:1

GENERAL TOLERANCES (UNLESS SPECIFIED)

ANGULAR TOL	± 1.0 °
4 PLACES	±
3 PLACES	±
2 PLACES	± 0.13
1 PLACE	± 0.25
0 PLACES	±

DRAFT WHERE APPLICABLE MUST REMAIN WITHIN DIMENSIONS

CURRENT REV DESC: SEE REVISION TABLE

EC NO: 713044
DRWN: AMRUTH 2022/06/30
CHK'D: DKUMARG 2022/06/30
APPR: SCHIEN 2022/07/05

INITIAL REVISION:
DRWN: AAPPARAOTHAK 2018/12/04
APPR: RCHEN08 2018/12/12

THIRD ANGLE PROJECTION | DRAWING: C-SIZE | SERIES: 74728

molex

1X4 SFP LIGHT PIPE ASSEMBLY, BACK-TOP

PRODUCT CUSTOMER DRAWING

DOCUMENT NUMBER	DOC TYPE	DOC PART	REVISION
747280001	PSD	ASY	E1

MATERIAL NUMBER	CUSTOMER	SHEET NUMBER
747280001	GENERAL MARKET	1 OF 5

FORMAT: master-tb-prod-C
REVISION: J1
DATE: 2021/05/01

PCB LAYOUT
FOR BELLY TO BELLY MOUNTING

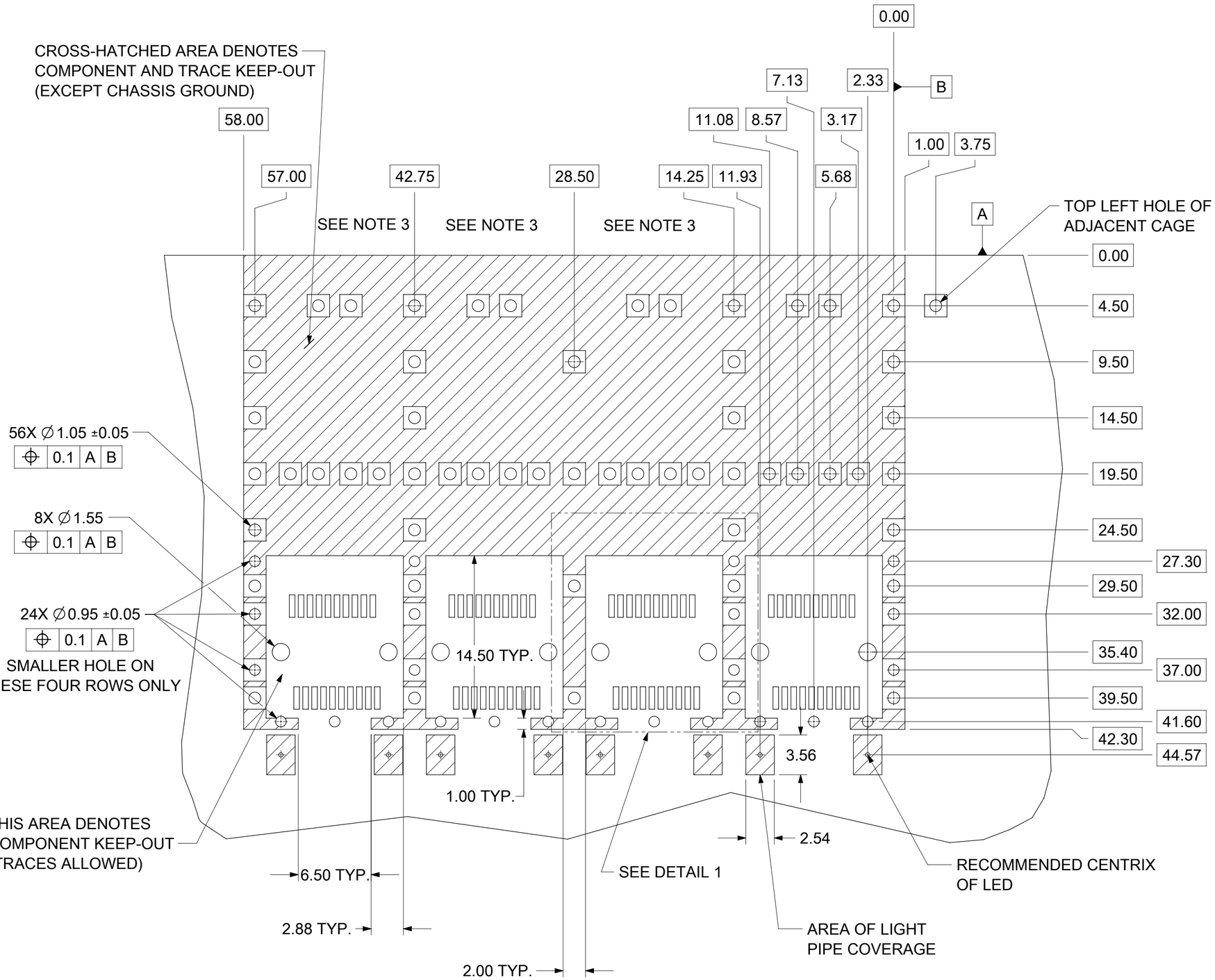

HOST CONNECTOR DETAIL

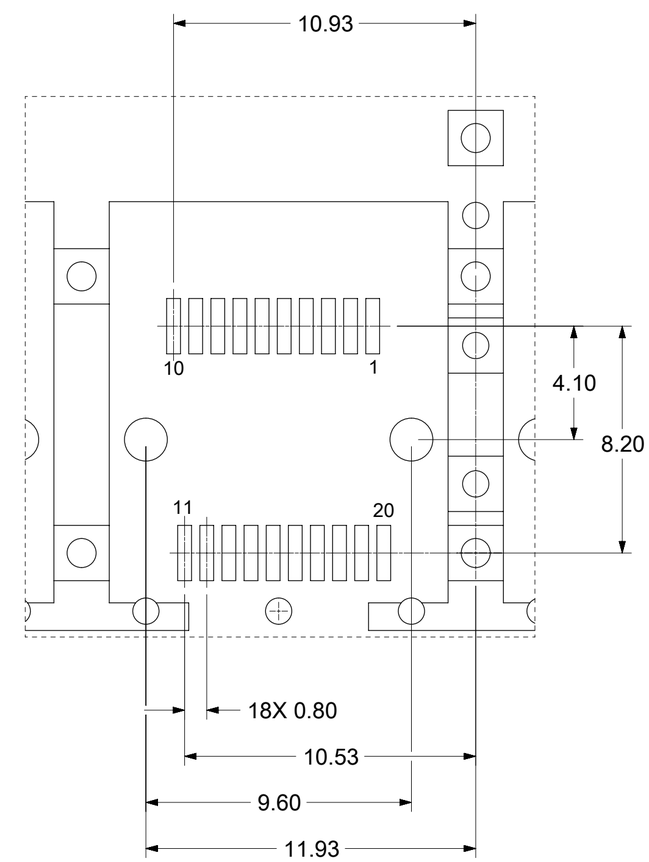

DETAIL 1
SCALE 6:1

NOTES:
1. PADS AND VIAS GO TO CHASSIS GROUND, (64 PLACES). RECOMMENDED PADS TO BE 2 mm SQUARE.
2. PLATING OPTIONAL FOR THROUGH HOLES, (16 PLACES).
3. RECOMMENDED PLATING INCLUDES HASL, IMMERSION (GOLD OR SILVER), AND OSP.
4. HOLE PATTERN REPEATS FOR EACH PORT, SPACING BETWEEN PORTS IS 14.25 mm.

DOCUMENT STATUS	P1	RELEASE DATE	2022/07/05 15:04:34

FUNCTIONAL SYMBOLS: FA = 0, FC = 0, FP = 0
DIVISIONAL SYMBOLS

THIS DRAWING CONTAINS INFORMATION THAT IS PROPRIETARY TO MOLEX ELECTRONIC TECHNOLOGIES, LLC AND SHOULD NOT BE USED WITHOUT WRITTEN PERMISSION

DIMENSION UNITS	SCALE
mm	3.5:1

GENERAL TOLERANCES (UNLESS SPECIFIED)

ANGULAR TOL	±	1.0 °
4 PLACES	±	
3 PLACES	±	
2 PLACES	±	0.13
1 PLACE	±	0.25
0 PLACES	±	

DRAFT WHERE APPLICABLE MUST REMAIN WITHIN DIMENSIONS

CURRENT REV DESC: SEE REVISION TABLE

EC NO: 713044
DRWN: AMRUTH 2022/06/30
CHK'D: DKUMARG 2022/06/30
APPR: SCHIEN 2022/07/05

INITIAL REVISION:
DRWN: AAPPARAOTHAK 2018/12/04
APPR: RCHEN08 2018/12/12

THIRD ANGLE PROJECTION | DRAWING: C-SIZE | SERIES: 74728

molex

1X4 SFP LIGHT PIPE ASSEMBLY, BACK-TOP

PRODUCT CUSTOMER DRAWING

DOCUMENT NUMBER	DOC TYPE	DOC PART	REVISION
747280001	PSD	ASY	E1

MATERIAL NUMBER	CUSTOMER	SHEET NUMBER
747280001	GENERAL MARKET	2 OF 5

FORMAT: master-tb-prod-C
REVISION: J1
DATE: 2021/05/01

PCB LAYOUT
FOR SINGLE SIDE MOUNTING

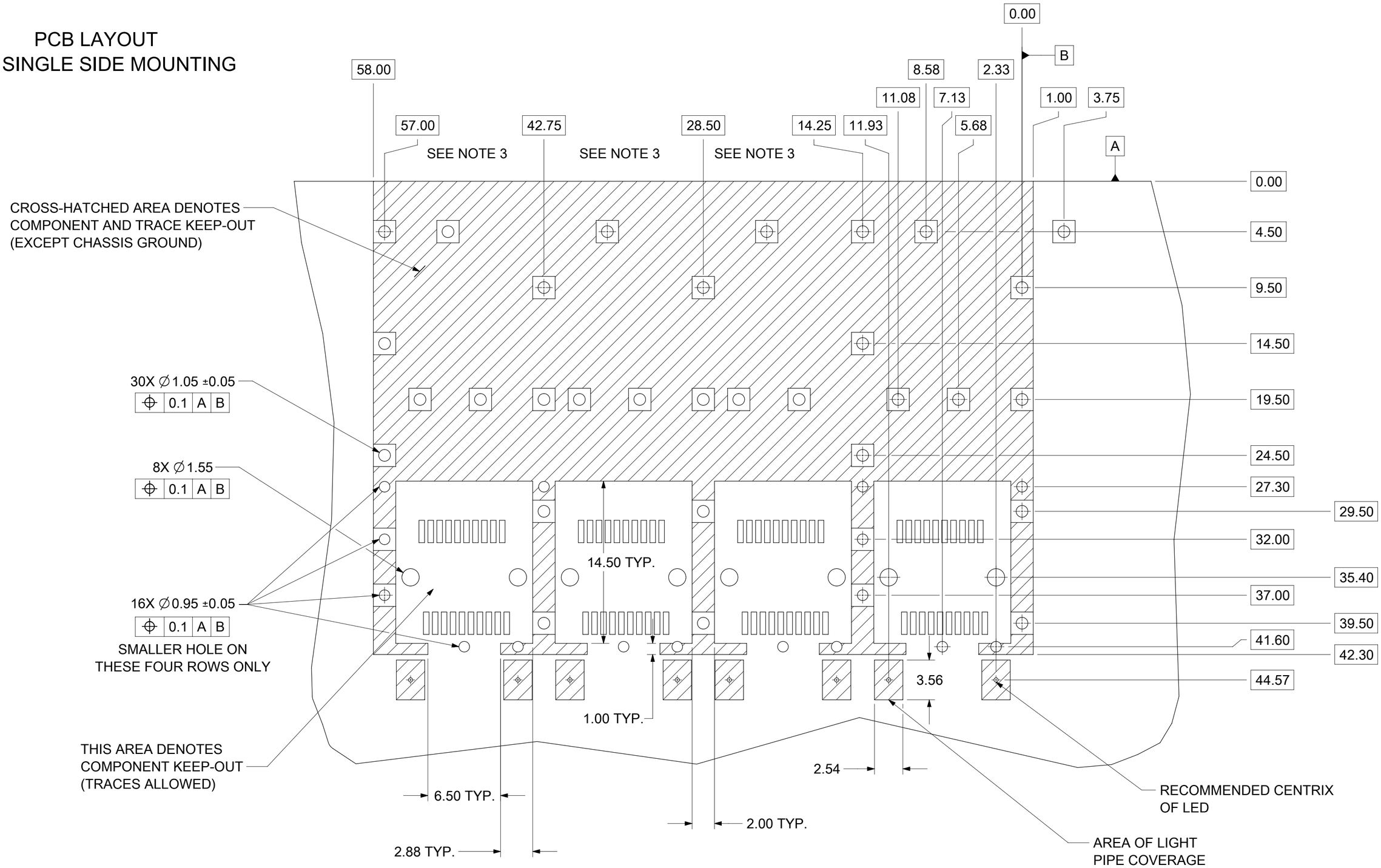

NOTES:
1. PADS AND VIAS GO TO CHASSIS GROUND, (34 PLACES). RECOMMENDED PADS TO BE 2 mm SQUARE.
2. PLATING OPTIONAL FOR THROUGH HOLES, (12 PLACES).
3. RECOMMENDED PLATING INCLUDES HASL, IMMERSION (GOLD OR SILVER), AND OSP.
4. HOLE PATTERN REPEATS FOR EACH PORT, SPACING BETWEEN PORTS IS 14.25 mm.

THIS DRAWING CONTAINS INFORMATION THAT IS PROPRIETARY TO MOLEX ELECTRONIC TECHNOLOGIES, LLC AND SHOULD NOT BE USED WITHOUT WRITTEN PERMISSION

FUNCTIONAL SYMBOLS	DIMENSION UNITS	SCALE	CURRENT REV DESC: SEE REVISION TABLE	molex
FA = 0	mm	4:1		
FC = 0	GENERAL TOLERANCES (UNLESS SPECIFIED)		EC NO: 713044	1X4 SFP LIGHT PIPE ASSEMBLY, BACK-TOP
FP = 0	ANGULAR TOL ± 1.0 °		DRWN: AMRUTH 2022/06/30	
DIVISIONAL SYMBOLS	4 PLACES ±		CHK'D: DKUMARG 2022/06/30	PRODUCT CUSTOMER DRAWING
	3 PLACES ±		APPR: SCHIEN 2022/07/05	
	2 PLACES ± 0.13		INITIAL REVISION:	DOCUMENT NUMBER / DOC TYPE / DOC PART / REVISION
	1 PLACE ± 0.25		DRWN: AAPPARAOTHAK 2018/12/04	747280001 / PSD / ASY / E1
	0 PLACES ±		APPR: RCHEN08 2018/12/12	
	DRAFT WHERE APPLICABLE MUST REMAIN WITHIN DIMENSIONS		THIRD ANGLE PROJECTION / DRAWING C-SIZE / SERIES 74728	MATERIAL NUMBER 747280001 / CUSTOMER GENERAL MARKET / SHEET NUMBER 3 OF 5

DOCUMENT STATUS	P1	RELEASE DATE	2022/07/05 15:04:34

FORMAT: master-tb-prod-C
REVISION: J1
DATE: 2021/05/01

BEZEL AND BOARD POSITION DIMENSIONS FOR SINGLE SIDE MOUNTING

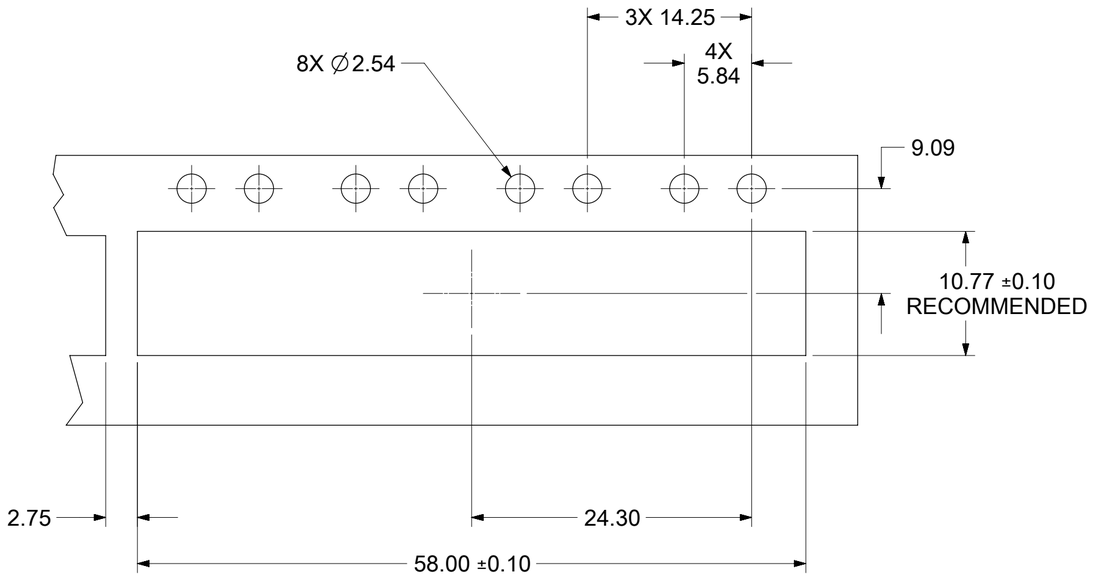

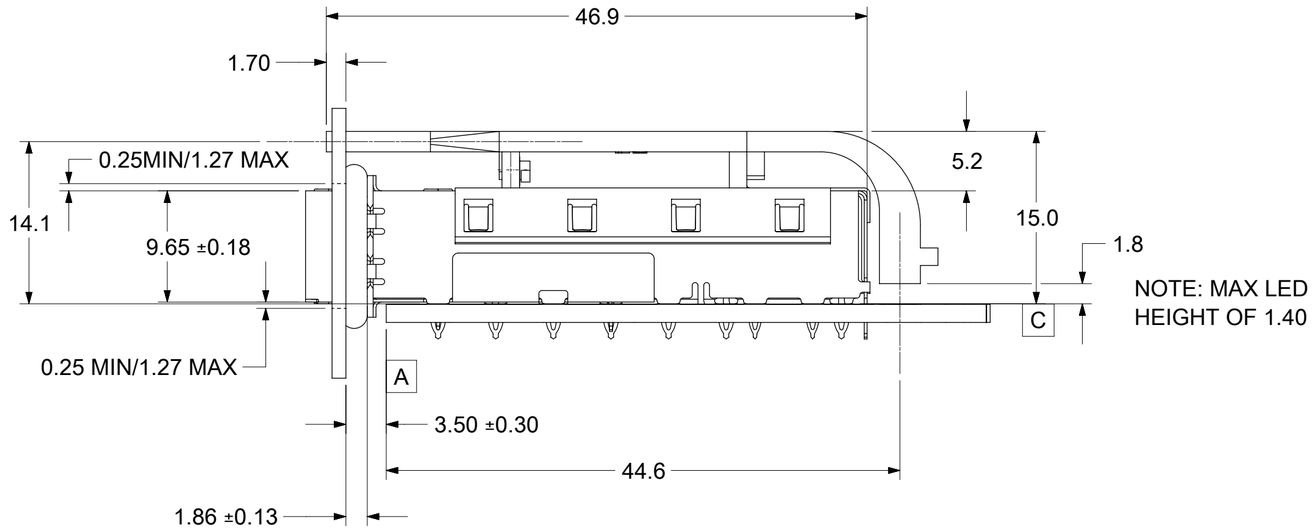

BEZEL AND BOARD POSITION DIMENSIONS FOR BELLY TO BELLY MOUNTING

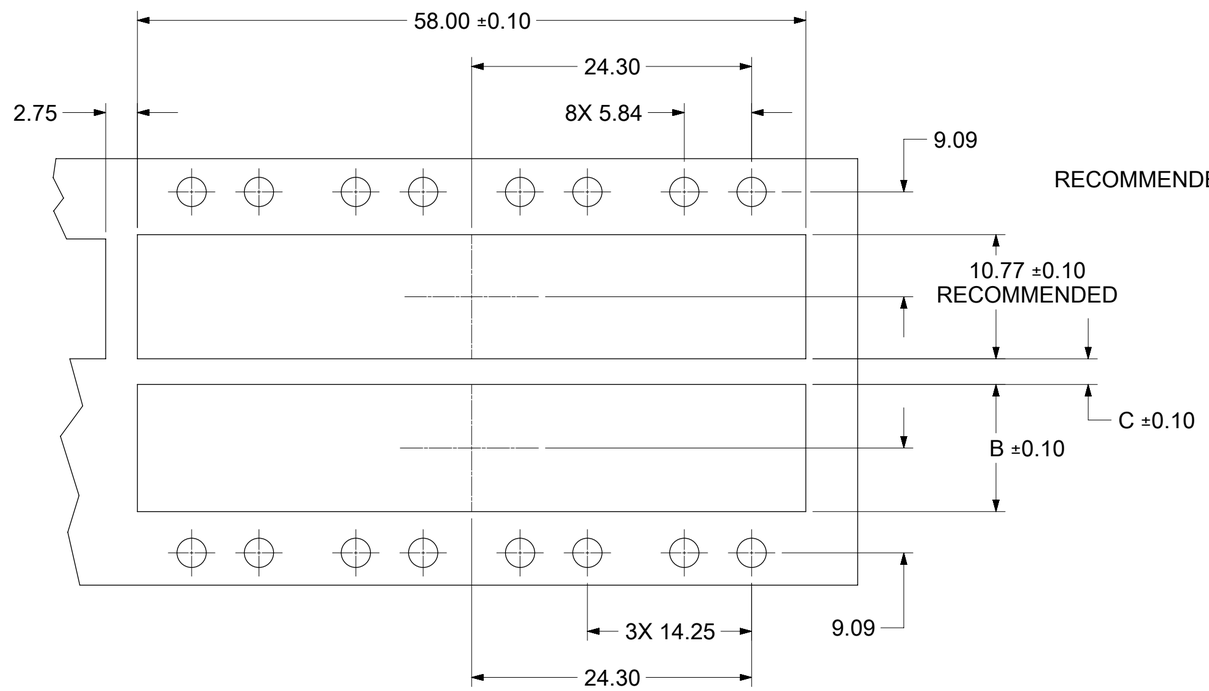

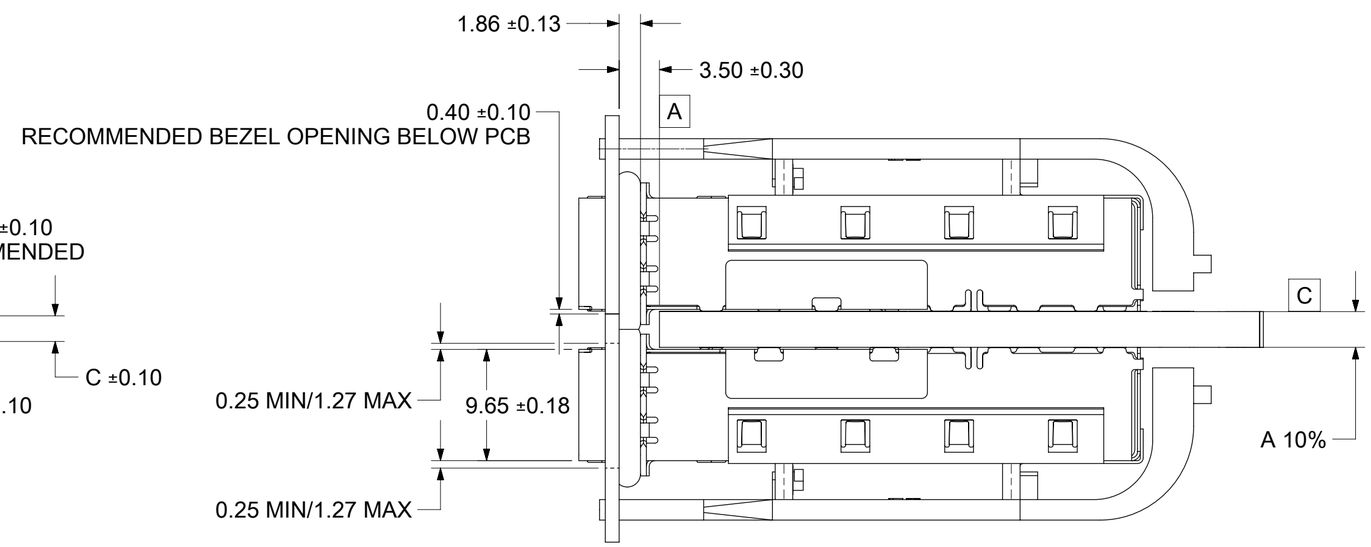

NOTE: FOR A GIVEN BOARD THICKNESS (A), DIMENSIONS (B) AND (C) ARE DIRECTLY AFFECTED.

USE RECOMMENDED DIMENSIONS AND TOLERANCES TO AID IN DEVELOPING BEZEL OPENING.

FOR EXAMPLE USING A BOARD THICKNESS OF 3.18 mm THE RECOMMENDED VALUES WOULD BE:

A= 3.18 ±10%
B= 11.03 ±0.1
C= 2.23 ±0.1

THIS DRAWING CONTAINS INFORMATION THAT IS PROPRIETARY TO MOLEX ELECTRONIC TECHNOLOGIES, LLC AND SHOULD NOT BE USED WITHOUT WRITTEN PERMISSION

FUNCTIONAL SYMBOLS	DIMENSION UNITS	SCALE
FA = 0	mm	2.5:1
FC = 0	GENERAL TOLERANCES (UNLESS SPECIFIED)	
FP = 0	ANGULAR TOL	± 1.0 °
DIVISIONAL SYMBOLS	4 PLACES	±
	3 PLACES	±
	2 PLACES	± 0.13
	1 PLACE	± 0.25
	0 PLACES	±
	DRAFT WHERE APPLICABLE MUST REMAIN WITHIN DIMENSIONS	

CURRENT REV DESC: SEE REVISION TABLE

EC NO: 713044
DRWN: AMRUTH 2022/06/30
CHK'D: DKUMARG 2022/06/30
APPR: SCHIEN 2022/07/05

INITIAL REVISION:
DRWN: AAPPARAOTHAK 2018/12/04
APPR: RCHEN08 2018/12/12

molex

1X4 SFP LIGHT PIPE ASSEMBLY, BACK-TOP

PRODUCT CUSTOMER DRAWING

DOCUMENT NUMBER	DOC TYPE	DOC PART	REVISION
747280001	PSD	ASY	E1

THIRD ANGLE PROJECTION	DRAWING	SERIES	MATERIAL NUMBER	CUSTOMER	SHEET NUMBER
	C-SIZE	74728	747280001	GENERAL MARKET	4 OF 5

DOCUMENT STATUS	P1	RELEASE DATE	2022/07/05 15:04:34

FORMAT: master-tb-prod-C
REVISION: J1
DATE: 2021/05/01

DATE	REV	DESCRIPTION
2004/07/08	A	1. INITIAL RELEASE.
2004/12/02	B	1. UPDATED VIEWS.
2005/06/03	C	1. CORRECTED P/N FOR DIALIGHT LED
2005/06/10	D	1. ON SHEET 1, UPDATED VIEWS TO SHOW CLEARANCE HOLES ADDED TO THE LIGHT PIPE COVER.
2018/06/12	E	REMASTERED FROM SD-74728-001 REV_D TO 747280001 PSD ASY REV_E IN NX/ECTR. SHEET 1 : D2: SIDE VIEW ADDED. C3: DATE CODE TABLE ADDED.
2022/07/05	E1	UPDATED WEEK/YEAR CODE TABLE & CHANGED TO GENERAL MARKET IN ECTR DATA.

THIS DRAWING CONTAINS INFORMATION THAT IS PROPRIETARY TO MOLEX ELECTRONIC TECHNOLOGIES, LLC AND SHOULD NOT BE USED WITHOUT WRITTEN PERMISSION

FUNCTIONAL SYMBOLS
FA = 0
FC = 0
FP = 0

DIVISIONAL SYMBOLS

DIMENSION UNITS: mm
SCALE: 1:1

GENERAL TOLERANCES (UNLESS SPECIFIED)

ANGULAR TOL	±	1.0 °
4 PLACES	±	
3 PLACES	±	
2 PLACES	±	0.13
1 PLACE	±	0.25
0 PLACES	±	

DRAFT WHERE APPLICABLE MUST REMAIN WITHIN DIMENSIONS

CURRENT REV DESC: SEE REVISION TABLE

EC NO: 713044
DRWN: AMRUTH 2022/06/30
CHK'D: DKUMARG 2022/06/30
APPR: SCHIEN 2022/07/05

INITIAL REVISION:
DRWN: AAPPARAOTHAK 2018/12/04
APPR: RCHEN08 2018/12/12

THIRD ANGLE PROJECTION
DRAWING: C-SIZE
SERIES: 74728

molex

1X4 SFP LIGHT PIPE ASSEMBLY, BACK-TOP

PRODUCT CUSTOMER DRAWING

DOCUMENT NUMBER	DOC TYPE	DOC PART	REVISION
747280001	PSD	ASY	E1

MATERIAL NUMBER	CUSTOMER	SHEET NUMBER
747280001	GENERAL MARKET	5 OF 5

DOCUMENT STATUS	P1	RELEASE DATE	2022/07/05 15:04:34

FORMAT: master-tb-prod-C
REVISION: J1
DATE: 2021/05/01