© 2021 TE Connectivity. All Rights Reserved.

REVISIONS					
P	LTR	DESCRIPTION	DATE	DWN	APVD
	A	INITIAL RELEASE	08AUG2014	PS	JK
	A1	PN STATUS UPDATED	17MAY2021	SB	KJK

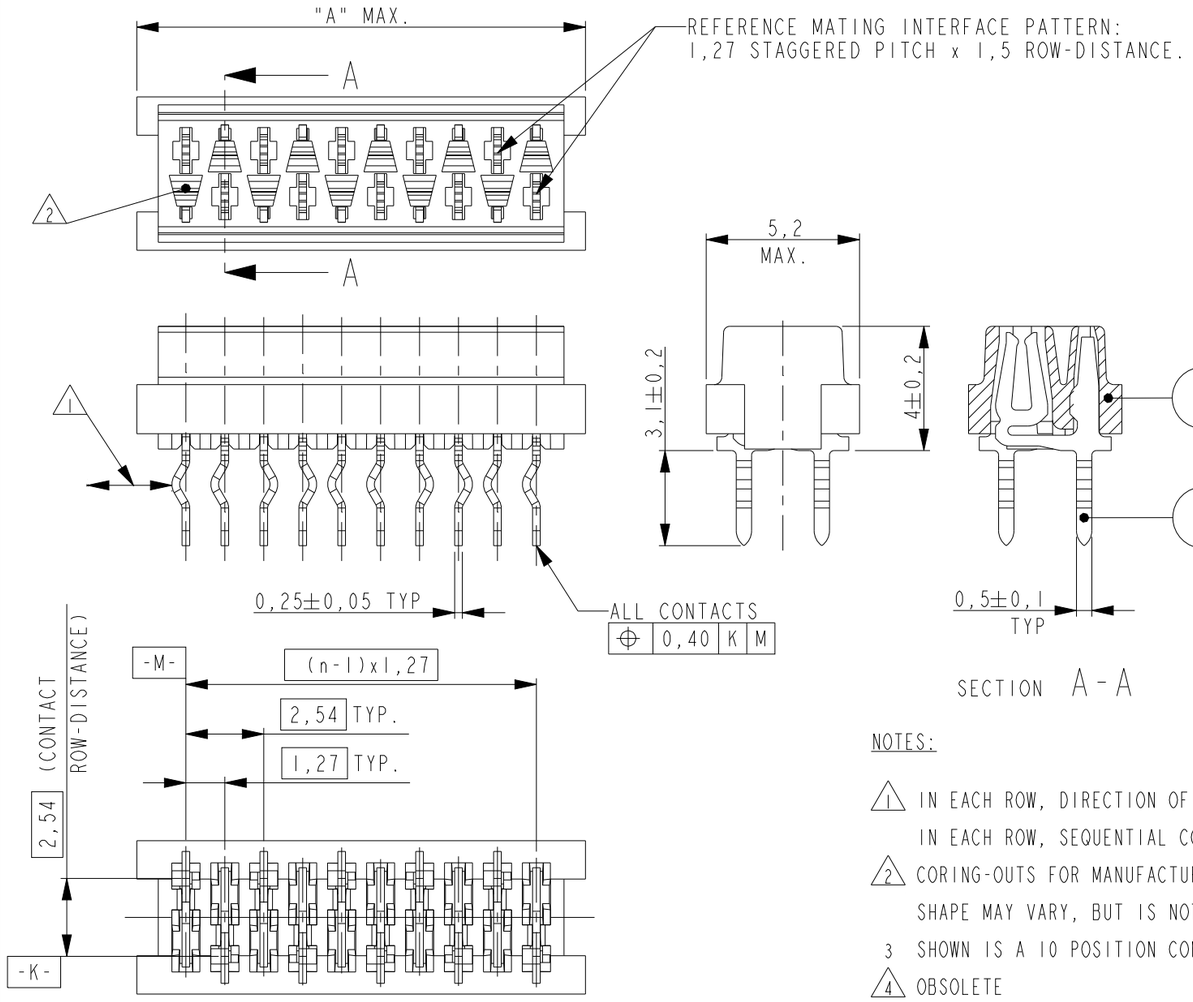

NOTES:

1. IN EACH ROW, DIRECTION OF KINKS STARTS RANDOM.
   IN EACH ROW, SEQUENTIAL CONTACTS HAVE OPPOSITE KINK DIRECTIONS.
2. CORING-OUTS FOR MANUFACTURING PURPOSE ONLY.
   SHAPE MAY VARY, BUT IS NOT FUNCTIONAL FOR THE APPLICATION.
3. SHOWN IS A 10 POSITION CONNECTOR.
4. OBSOLETE

PARTNUMBER REEL PACKAGING	NO. OF POS. "n"	DIMENSION "A" MAX
4 ~~2178710-4~~	4	7,1
4 ~~2178710-6~~	6	9,7
4 ~~2178710-8~~	8	12,2
1-2178710-0	10	14,7
4 ~~1-2178710-2~~	12	17,3
4 ~~1-2178710-4~~	14	19,8
4 ~~1-2178710-6~~	16	22,4
4 ~~1-2178710-8~~	18	24,9
4 ~~2-2178710-0~~	20	27,4

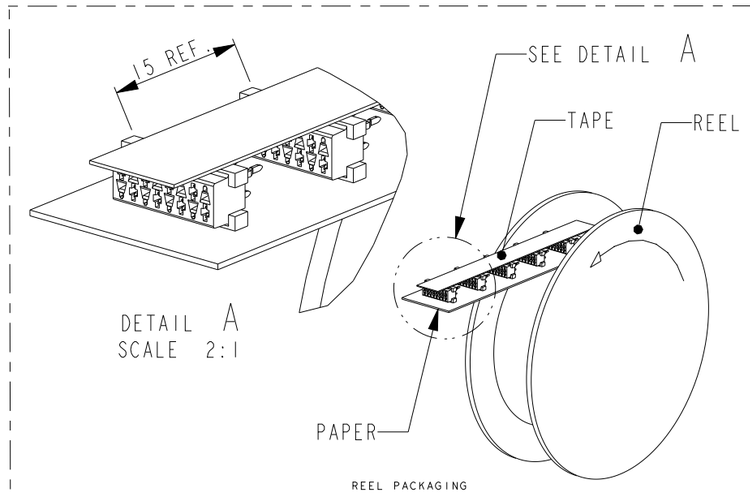

REEL PACKAGING
DEREELING DIRECTION AND CONNECTOR POSITION
2500 CONNECTORS PER REEL FOR ALL PARTNUMBERS

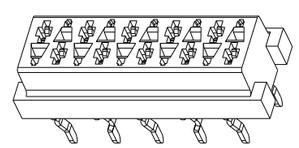

SCALE 3:1

PC-BOARD HOLE LAYOUT
(COMPONENT SIDE OF BOARD SHOWN)

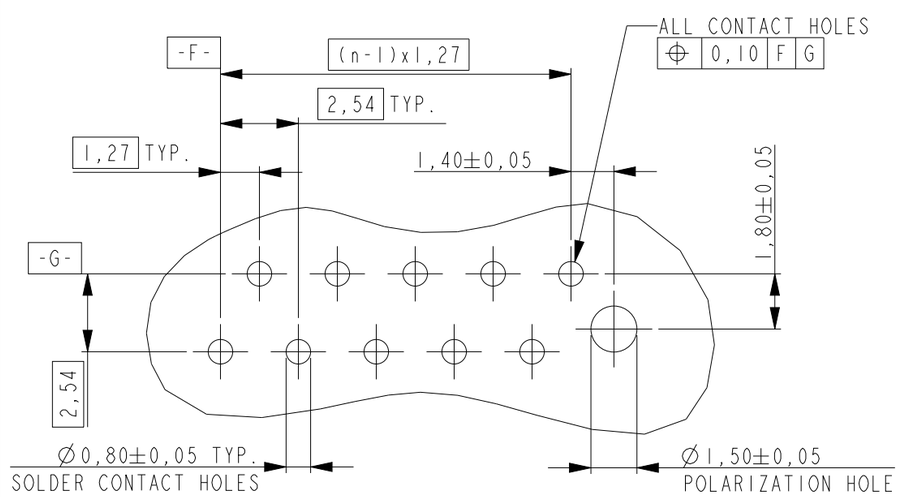

ITEM NO.	COMPONENT DESCRIPTION	MATERIAL	FINISH / COLOR
2	FEMALE HOUSING	PBT	BLACK
1	FEMALE CONTACT	TIN BRASS	3.0 -5.0µm TIN OVER 0.5µm NICKEL

THIS DRAWING IS A CONTROLLED DOCUMENT.

DIMENSIONS: mm

TOLERANCES UNLESS OTHERWISE SPECIFIED:
0 PLC ±-
1 PLC ±-
2 PLC ±-
3 PLC ±-
4 PLC ±-
ANGLES ±-

MATERIAL: SEE TABLE
FINISH: SEE TABLE

DWN PRASHANTH 25JUL2014
CHK PRASHANTH 02AUG2014
APVD JAYANTH KUMAR 06AUG2014
PRODUCT SPEC 108-32087
APPLICATION SPEC -
WEIGHT -

TE Connectivity

NAME: Micro-MaTcH VALUE LINE FEMALE-ON-BOARD TOP ENTRY, THRU-HOLE CONNECTOR

SIZE	CAGE CODE	DRAWING NO	RESTRICTED TO
A3	00779	C-2178710	

CUSTOMER DRAWING | SCALE 5:1 | SHEET 1 OF 1 | REV A1

1470-19 (3/13)