ITEM NO.	PART NUMBER	DESCRIPTION	QTY.	COMPONENT NOTES
1	54-00308	Connector, dc jack w/switch, 5.5x2.5xL22 mm, panel mount, threaded, nut and washer, IP67	1	with epoxy and silicone gasket
2	30-02541	Wire, hook-up, TS, 18 AWG, UL 1332, 300V, 200C, 1.8 mm, FEP, red	1	
3	30-02542	Wire, hook-up, TS, 18 AWG, UL 1332, 300V, 200C, 1.8 mm, FEP, black	1	
4	30-02543	Wire, hook-up, TS, 18 AWG, UL 1332, 300V, 200C, 1.8 mm, FEP, white	1	
5	Heat Shrink	Heat shrink tube, 4 mm, high temperature	3	200 °C, Viton or equivalent

Installation Details
Panel thickness: 4.5 mm max
Recommended panel cutout:

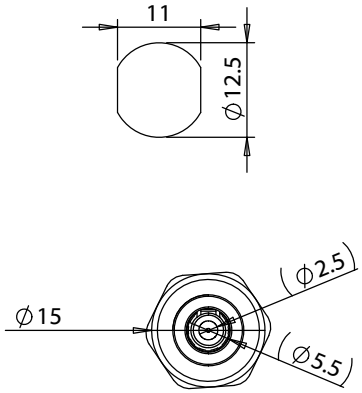

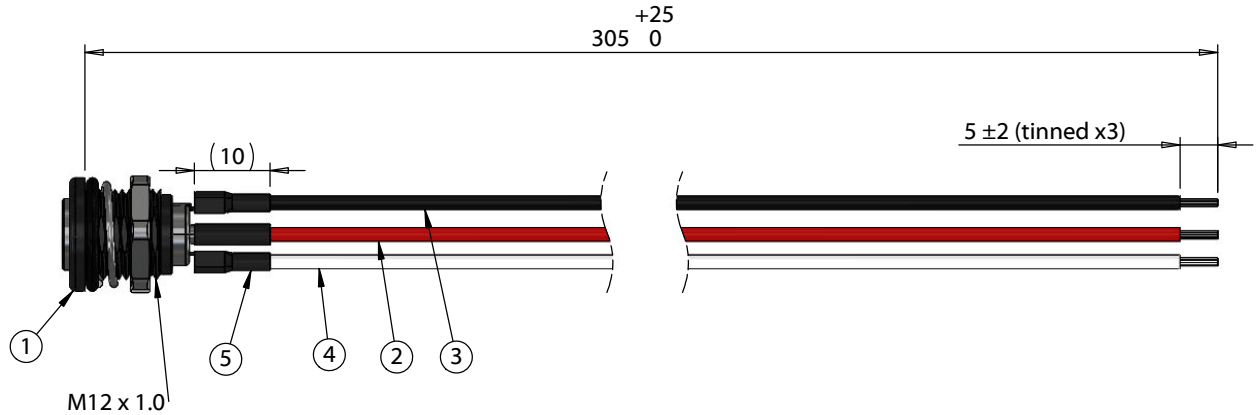

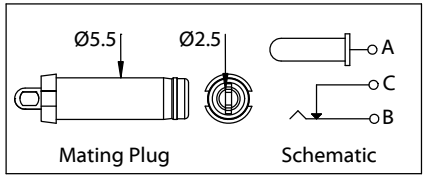

Wiring Diagram	
54-00308	Wire Color
Center (A)	Red
Sleeve (B)	Black
Switch (C)	White

Notes:
Operating temperature -30 ~ 180 °C
Cable rated for 48 V, 8.0 A
Panel ingress protection: IP67

Revision:	Date:	Description:
A	8/16/2022	Initial release

Prepared: MP Digitally signed by MP Date: 2022.08.16 10:04:00 -07'00'

Verified: AG Digitally signed by AG Date: 2022.08.17 11:04:30 -07'00'

Dimensions are in millimeters.
Tolerances:
X: ± 0.5 mm
X.X: ± 0.3 mm
X.XX: ± 0.05 mm

Notes:

RoHS compliant

Function test: no open, no short circuit, no intermittent

Description:
Cable, 305 mm, 5.5x2.5 mm 54-00308 to stripped and tinned, 18 AWG, UL1332 wire, IP67

TENSILITY
tel 1.541.323.3228 800 877.670.7118
fax 1.541.323.4202 web tensility.com

Size: A
Part number: 10-05155
Scale: 1:1
Sheet 1 of 1

5 4 3 2 1

To see a custom version of this cable assembly, call Tensility at 541-323-3228 or email engineering@tensility.com