Not Recommended for New Design

# AP1515

150KHz, 1.5A PWM Buck DC/DC Converter

## Features

- Output voltage: 3.3V and adjustable output version
- Adjustable version output voltage range, 1.23V to 18V±4%
- 150KHz ±15% fixed switching frequency
- Voltage mode non-synchronous PWM control
- Thermal-shutdown and current-limit protection
- Operating voltage can be up to 22V
- Output load current: 1.5A
- SIP-4L, SOP-8 **Pb-Free** package
- Low power standby mode
- Built-in switching transistor on chip
- Very Low Cost

## Applications

- Simple High-efficiency step-down regulator
- On-card switching regulators
- Positive to negative converter

## General Description

The AP1515 series are monolithic IC designed for a step-down DC/DC converter, and own the ability of driving a 1.5A load without additional transistor component. Due to reducing the number of external component, the board space can be saved easily. The external shutdown function can be controlled by logic level and then come into standby mode. The internal compensation makes feedback control have good line and load regulation without external design. Regarding protected function, thermal shutdown is to prevent over temperature operating from damage, and current limit is against over current operating of the output switch. If current limit function occurred and $V_{FB}$ is down to 0.5V below, the switching frequency will be reduced. The AP1515 series operates at a switching frequency of 150KHz thus allowing smaller sized filter components than what would be needed with lower frequency switching regulators. Other features include a guaranteed ±4% tolerance on output voltage under specified input voltage and output load conditions, and ±15% on the oscillator frequency. The output version included fixed 3.3V and an adjustable type.

## Pin Assignments

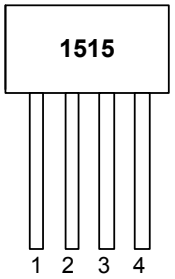


(Front View)

1 : $V_{IN}$

2 : Output

3 : FB

4 : GND

**SIP-4L**

(Top View)

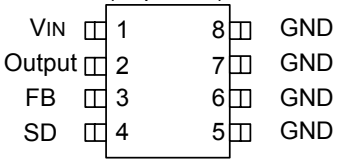


**SOP-8L**

## Pin Descriptions

| Name | Description |
|---|---|
| $V_{IN}$ | Operating voltage input |
| Output | Switching output |
| FB | Output voltage feedback control |
| SD | ON/OFF Shutdown |
| GND | Ground |

This datasheet contains new product information. Anachip Corp. reserves the rights to modify the product specification without notice. No liability is assumed as a result of the use of this product. No rights under any patent accompany the sale of the product.

## Ordering Information

**AP1515 XX X X**

| Output version | Package | Packing |
|---|---|---|
| Blank : Adjustable | P: SIP-4L(Bulk) | Blank : Tube |
| -33 : 3.3V | S: SOP-8L | A : Taping |

## Block Diagram

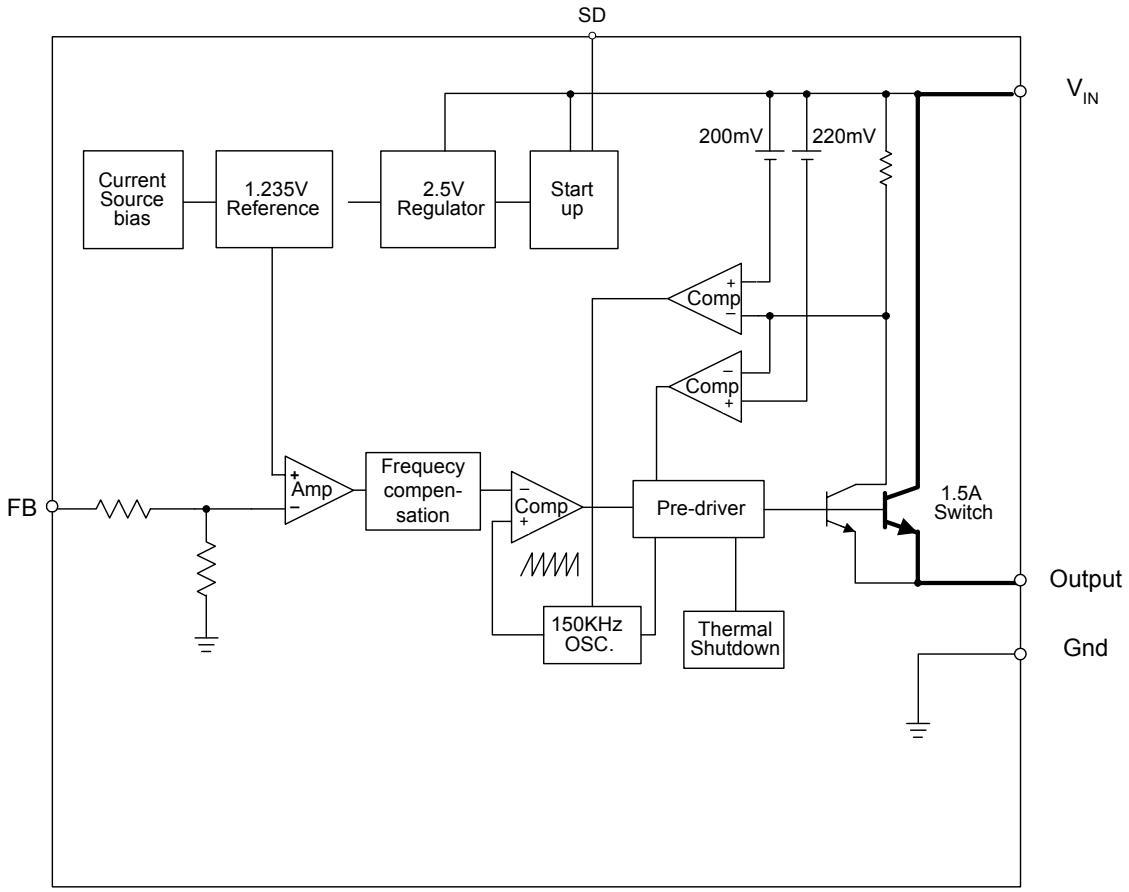

## ■ Absolute Maximum Ratings

| Symbol | Parameter | Rating | Unit |
|---|---|---|---|
| $V_{CC}$ | Supply Voltage | +24 | V |
| $V_{SD}$ | ON/OFF Pin input voltage | -0.3 to +18 | V |
| $V_{FB}$ | Feedback Pin voltage | -0.3 to +18 | V |
| $V_{OUT}$ | Output Voltage to Ground | -1 | V |
| $P_D$ | Power Dissipation | Internally limited | W |
| $T_{ST}$ | Storage temperature | -65 to +150 | °C |
| $T_{OP}$ | Operating temperature | -40 to +125 | °C |
| $V_{OP}$ | Operating voltage | +4.5 to +22 | V |

## ■ Electrical Characteristics (All Output Voltage Versions)

Unless otherwise specified, $V_{IN}$= 12V for 3.3V, 5V, adjustable version and $V_{IN}$=18V for the 12V version. $I_{LOAD}$ = 0.5A

| Symbol | Parameter | Conditions | | Min. | Typ. | Max. | Unit |
|---|---|---|---|---|---|---|---|
| $I_{FB}$ | Feedback bias current | $V_{FB}$=1.3V (Adjustable version only) | | - | -10 | -50<br>**-100** | nA |
| $F_{OSC}$ | Oscillator frequency | | | 127<br>**110** | 150<br>**-** | 173<br>**173** | KHz |
| $F_{SCP}$ | Oscillator frequency of short circuit protect | When current limit occurred and $V_{FB}$ < 0.5V, Ta=25 °C | | 10 | 30 | 50 | KHz |
| $V_{SAT}$ | Saturation voltage | $I_{OUT}$=2A<br>No outside circuit<br>$V_{FB}$=0V force driver on | | - | 1.25 | 1.4<br>**1.5** | V |
| DC | Max. Duty Cycle (ON) | $V_{FB}$=0V force driver on | | - | 100 | - | % |
| | Min. Duty Cycle (OFF) | $V_{FB}$=12V force driver off | | - | 0 | - | |
| $I_{CL}$ | Current limit | Peak current<br>No outside circuit<br>$V_{FB}$=0V force driver on | SIP-4 | 2 | - | - | A |
| | | | SOP-8 | 2.5 | - | - | |
| $I_L$ | Output = 0 (Output leakage current) | No outside circuit<br>$V_{FB}$=12V force driver off | | - | - | -200 | uA |
| | Output = -1 (Output leakage current) | $V_{IN}$=22V | | - | -5 | | mA |
| $I_Q$ | Quiescent Current | $V_{FB}$=12V force driver off | | - | 5 | 10 | mA |
| $I_{STBY}$ | Standby Quiescent Current | ON/OFF pin=5V<br>$V_{IN}$=22V | | - | 70 | 150<br>**200** | uA |
| $\theta_{JC}$ | Thermal Resistance | Junction to case | SIP-4 | - | 30 | - | °C/W |
| | | | SOP-8 | | 15 | | |
| $\theta_{JA}$ | Note 1 | Junction to ambient | SIP-4 | - | 100 | - | °C/W |
| | | | SOP-8 | | 70 | | |

| Part Number | Symbol | Parameter | Conditions | Typ. | Limit | Unit |
|---|---|---|---|---|---|---|
| AP1515-ADJ | $V_{FB}$ | Output Feedback | 4.5V ≤ $V_{IN}$ ≤ 22V<br>0.2A ≤ $I_{LOAD}$ ≤ 1.5A<br>$V_{OUT}$ programmed for 3V | 1.23 | 1.193/**1.18**<br>1.267/**1.28** | V<br>$V_{MIN}$<br>$V_{MAX}$ |
| | η | Efficiency | $V_{IN}$ = 12V, $I_{LOAD}$=1.5A | 78 | | % |
| AP1515-3.3V | $V_{OUT}$ | Output voltage | 4.75V ≤ $V_{IN}$ ≤ 22V<br>0.2A ≤ $I_{LOAD}$ ≤ 1.5A | 3.3 | 3.168/**3.135**<br>3.432/**3.465** | V<br>$V_{MIN}$<br>$V_{MAX}$ |
| | η | Efficiency | $V_{IN}$ = 12V, $I_{LOAD}$=1.5A | 80 | | % |

Specifications with **boldface type** are for full operating temperature range, the other type are for $T_J$=25°C.

**Note 1:** Pin 4(GND) (< 1 mm length) & direct connect to internal GND layer (for SIP-4 only).

## ■ Typical Application Circuit

### (1) Fixed Type Circuit

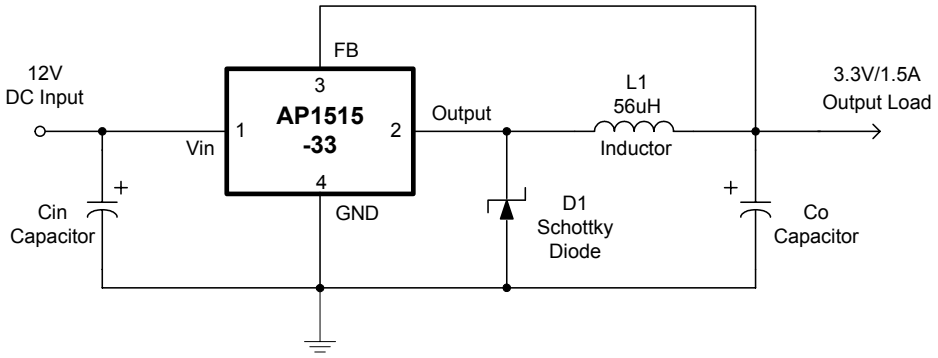


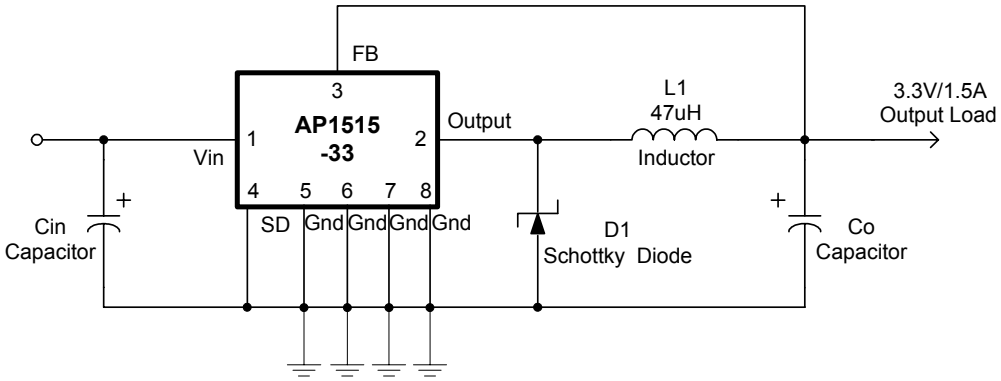


### (2) Adjustable Type Circuit

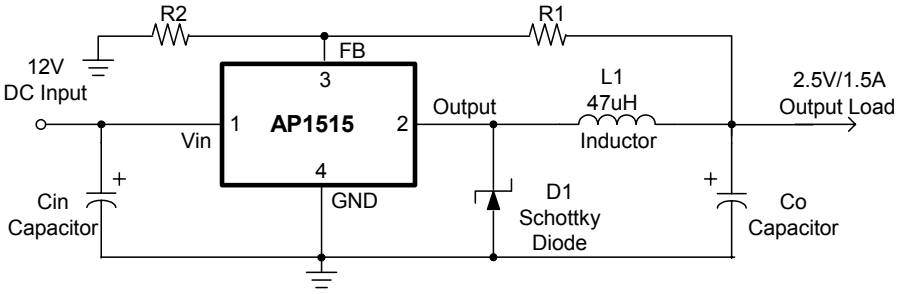


$$Vout = V_{FB} \times (1 + \frac{R1}{R2})$$

$V_{FB}$ = 1.23V
R2 = 1K ~ 3K

## ■ Typical Application Circuit (Continued)

**(2) Adjustable Type Circuit**

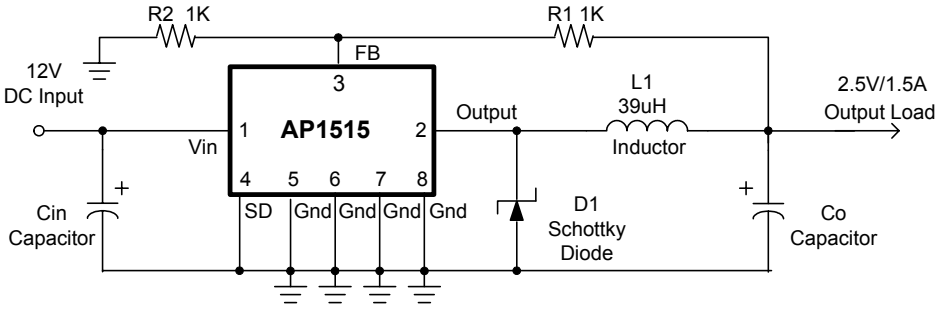


$$Vout = V_{FB} \times (1 + \frac{R1}{R2})$$

$V_{FB}$ = 1.23V
R2 = 1K ~ 3K

## ■ Typical Performance Characteristics

**AP1515 Output Voltage v.s. Temperature (Vin=12V ,Io=1.5A)**

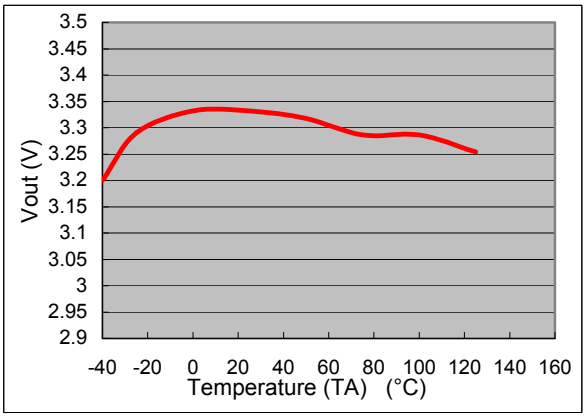


**AP1515 Efficiency v.s. Temperature (Vin=12V,Vout=3.3V,Io=1.5A)**

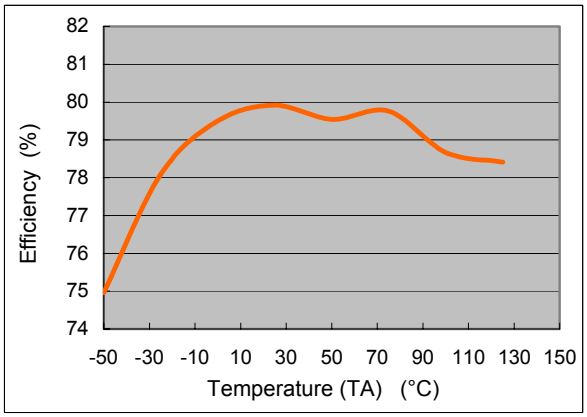

## ■ Typical Performance Characteristics (Continued)

**AP1515 Saturation Voltage v.s. Temperature (Vcc=12V,Vfb=0V,VSD=0)**

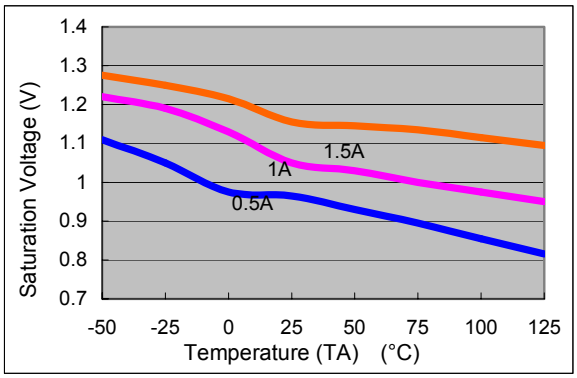


**AP1515 Switch Current Limit v.s. Temperature (Vcc=12V,Vfb=0V)**

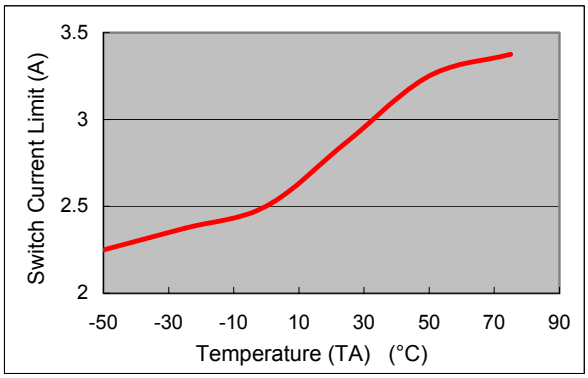


**AP1515 Supply Current v.s. Temperature (Vcc=12V , No Load ,Von/off =0V(Switch ON) ,Von/off =5V(Switch OFF))**

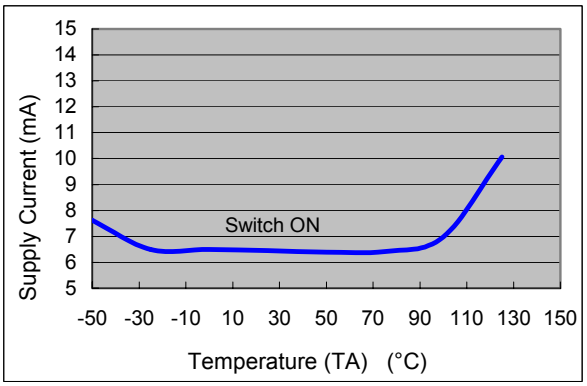


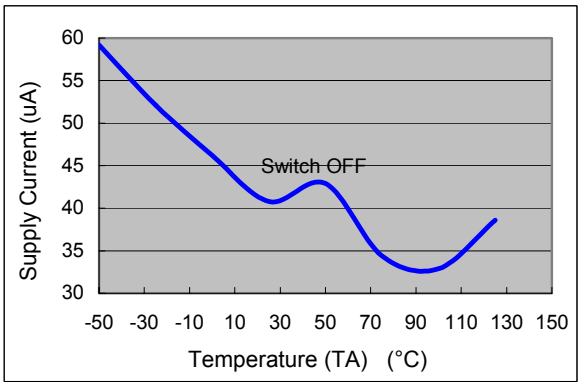


**AP1515 Frequency v.s. Temperature (Vcc=12V , Io=500mA ,Vout=5V)**

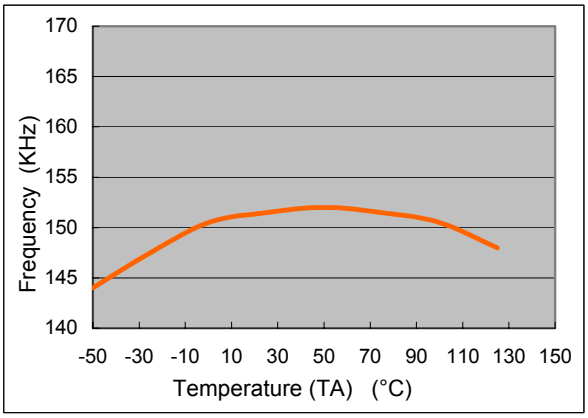


**AP1515 Feedback Current v.s. Temperature (Vcc=12V , Vout=5V,Vfb=1.3V)**

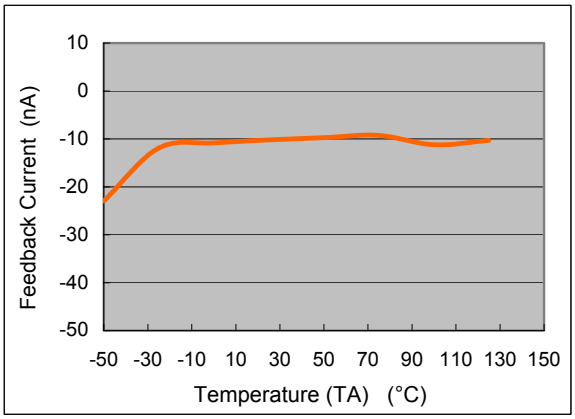

## ■ Function Description

**Pin Functions**

**+$V_{IN}$**

This is the positive input supply for the IC switching regulator. A suitable input bypass capacitor must be present at this pin to minimize voltage transients and to supply the switching currents needed by the regulator.

**Ground**

Circuit ground.

**Output**

Internal switch. The voltage at this pin switches between (+$V_{IN}$ – $V_{SAT}$) and approximately – 0.5V, with a duty cycle of approximately $V_{OUT}$ / $V_{IN}$. To minimize coupling to sensitive circuitry, the PC board copper area connected to this pin should be kept a minimum.

**Feedback**

Senses the regulated output voltage to complete the feedback loop.

**SD**

Allows the switching regulator circuit to be shutdown using logic level signals thus dropping the total input supply current to approximately 150uA. Pulling this pin below a threshold voltage of approximately 1.3V turns the regulator on, and pulling this pin above 1.3V (up to a maximum of 18V) shuts the regulator down. If this shutdown feature is not needed, the SD pin can be wired to the ground pin.

## ■ Marking Information

**(1) SIP-4L**

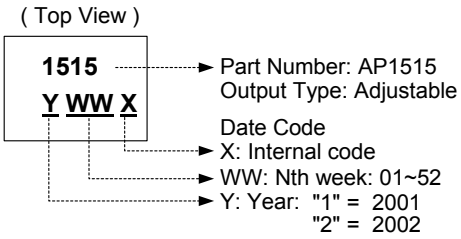


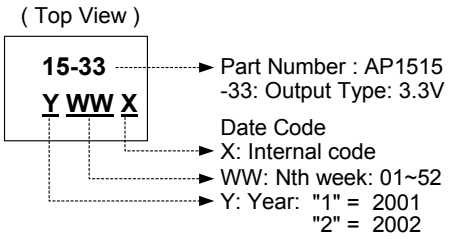


**(2) SOP-8L**

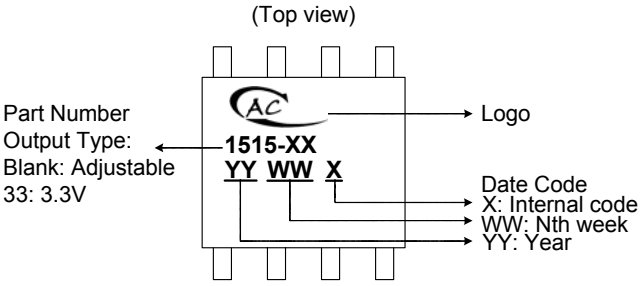

## ■ Package Information

**(1) Package Type: SIP-4L**

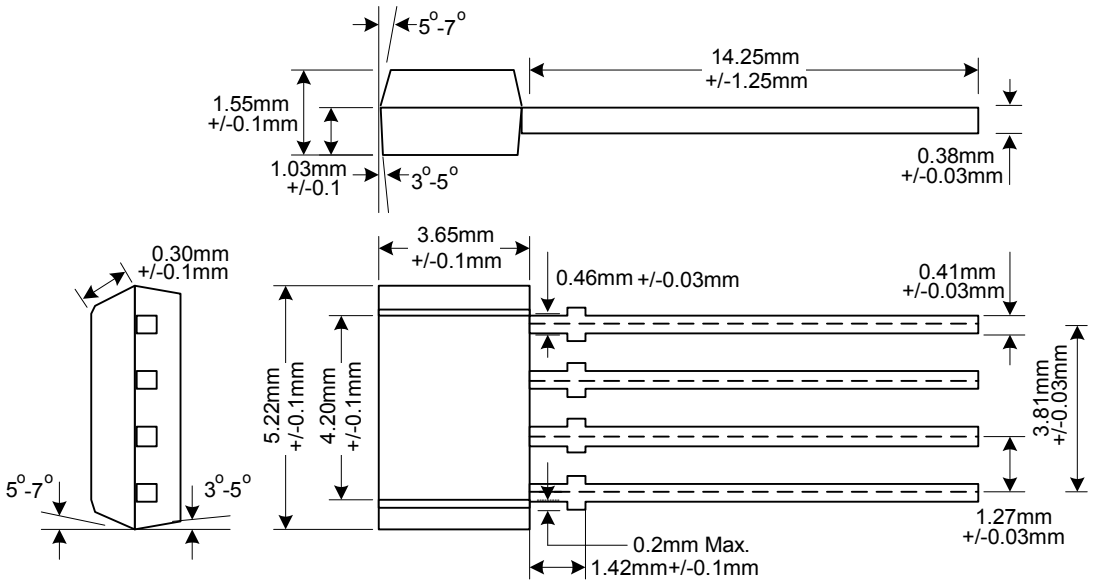

## ■ Package Information (Continued)

**(2) Package Type: SOP-8L**

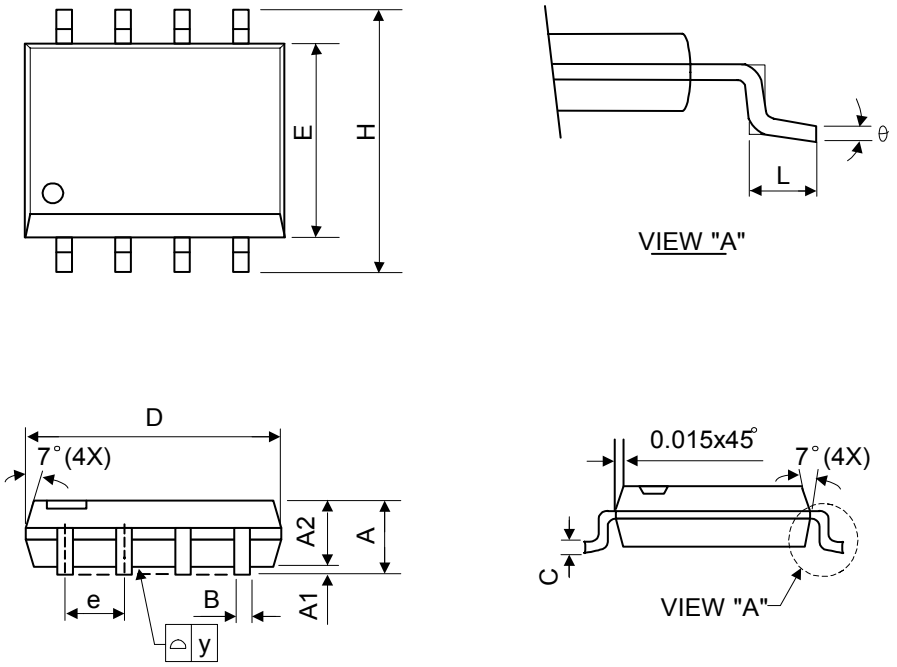


| Symbol | Dimensions In Millimeters | | | Dimensions In Inches | | |
|---|---|---|---|---|---|---|
| | Min. | Nom. | Max. | Min. | Nom. | Max. |
| A | 1.40 | 1.60 | 1.75 | 0.055 | 0.063 | 0.069 |
| A1 | 0.10 | - | 0.25 | 0.040 | - | 0.100 |
| A2 | 1.30 | 1.45 | 1.50 | 0.051 | 0.057 | 0.059 |
| B | 0.33 | 0.41 | 0.51 | 0.013 | 0.016 | 0.020 |
| C | 0.19 | 0.20 | 0.25 | 0.0075 | 0.008 | 0.010 |
| D | 4.80 | 5.05 | 5.30 | 0.189 | 0.199 | 0.209 |
| E | 3.70 | 3.90 | 4.10 | 0.146 | 0.154 | 0.161 |
| e | - | 1.27 | - | - | 0.050 | - |
| H | 5.79 | 5.99 | 6.20 | 0.228 | 0.236 | 0.244 |
| L | 0.38 | 0.71 | 1.27 | 0.015 | 0.028 | 0.050 |
| y | - | - | 0.10 | - | - | 0.004 |
| θ | $0^{o}$ | - | $8^{o}$ | $0^{o}$ | - | $8^{o}$ |