REV.	LOCAS.	DESCRIPTION	DATE	DRAWN
08	08	變更料號	2009.03.27	余曉斌
09	09	依上級要求變更圖號	2011.10.11	李芳忠

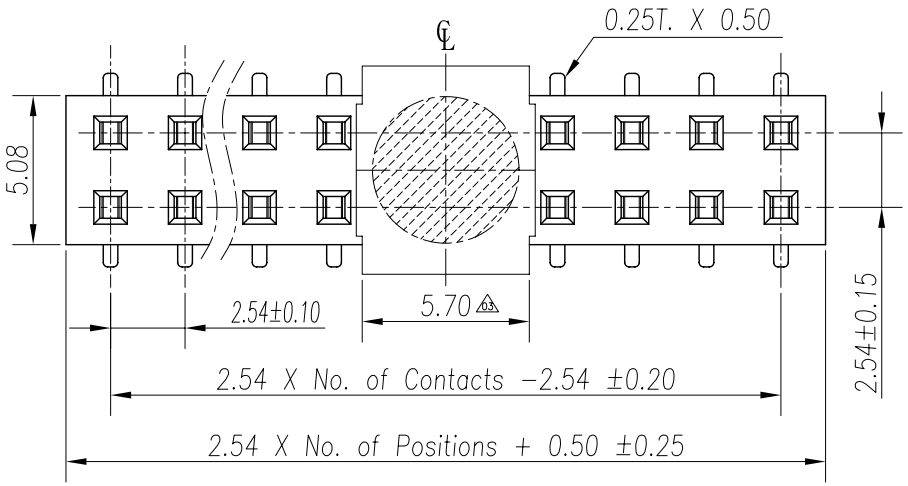

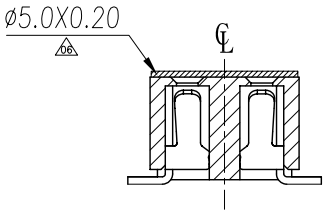

Specifications
Current Rating:3Amp
Insulation Resistance:1000MΩMin.
Dielectric Withstanding Voltage:600VAC
Contact Resistance:20mΩMax.
Operating Temperature:−40°C to +105°C
Materials
Contact Material:Phosphor Bronze
Insulator Material:High Temperature Thermoplastic, UL 94V−0 Nylon 6T or the equivalent material
All materials must meet Greenconn requirement for environment protection.

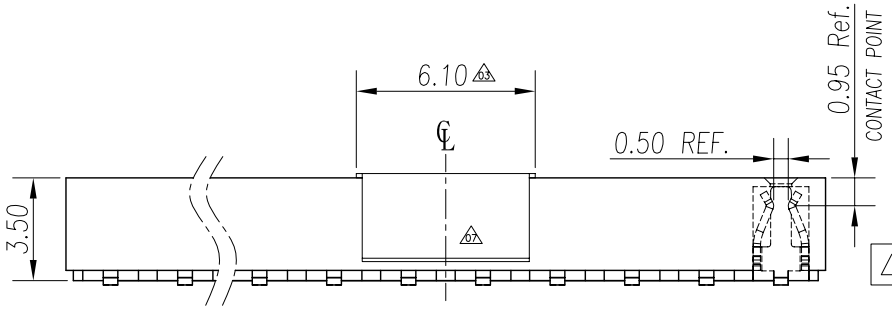

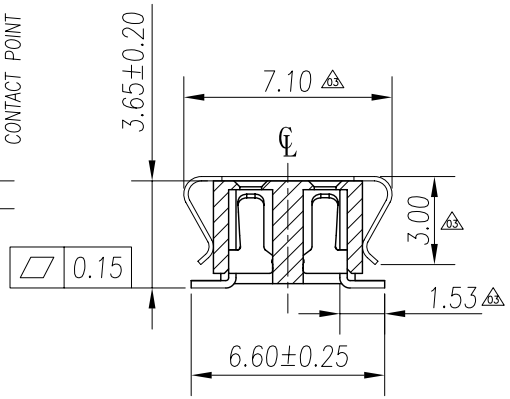

RECOMMENDED P.C.B LAYOUT
FOR BOTTOM ENTRY

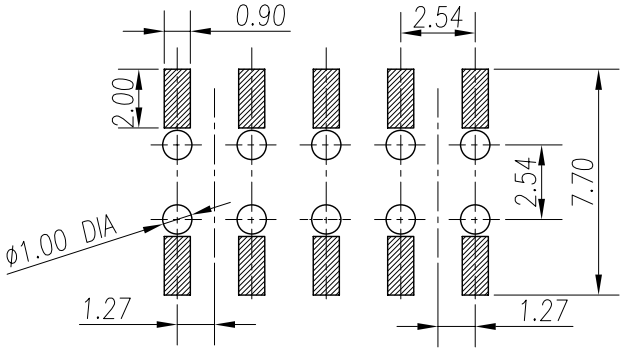

RECOMMENDED P.C.B LAYOUT
FOR TOP ENTRY

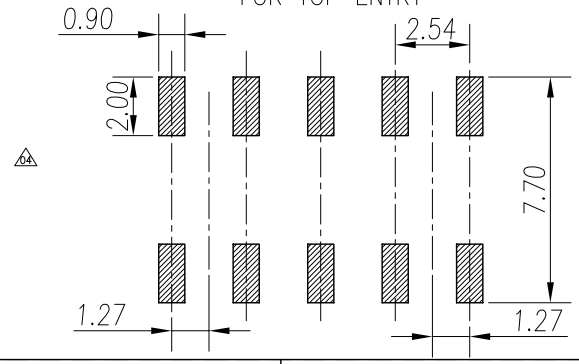

Ordering Information 08

C SHC211 − XX XX A 001 B 1 A X

- XX: No. of Pins per Row 02~40
- XX: Standard Plating 02=Gold Flash; Selective Plating 01=Tin, 05=Gold Flash/Tin
- 1: Color 1=Black
- X: Standard Packing C=Tube; Selective Packing A=Box, E=Cap+Tube, F=Cap+Tape&Reel, G=Acetate Tape+Tube, H=Acetate Tape+Tape&Reel

格稜股份有限公司
Greenconn Corporation

REV.	UNIT.	SCALE.	PAGE.
09	mm	4:1	1/1

GENERAL TOLERANCE	
X.°±5.0°	X.±0.30
.X°±3.0°	.X±0.25
.XX°±2.0°	.XX±0.15
.XXX°±1.0°	.XXX±0.10

DESIGN:	李芳忠	DATE:	2011.10.11
CHECKED:	劉北平	DATE:	2011.10.11
AUDITED:	李 輝	DATE:	2011.10.11
APPROVED:	cc_li	DATE:	2011.10.11

DWG. NO. 08 09 CSHC211−CA1BA

PART NO. 08 CSHC211−XXXX A001B1AX

TITLE. 2.54 FEMALE HEADER DUAL ROWS SMT TYPE CONNECTOR