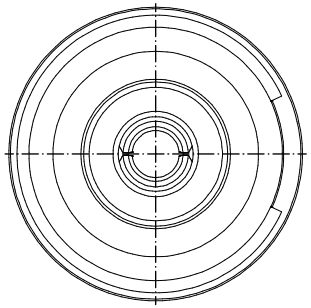

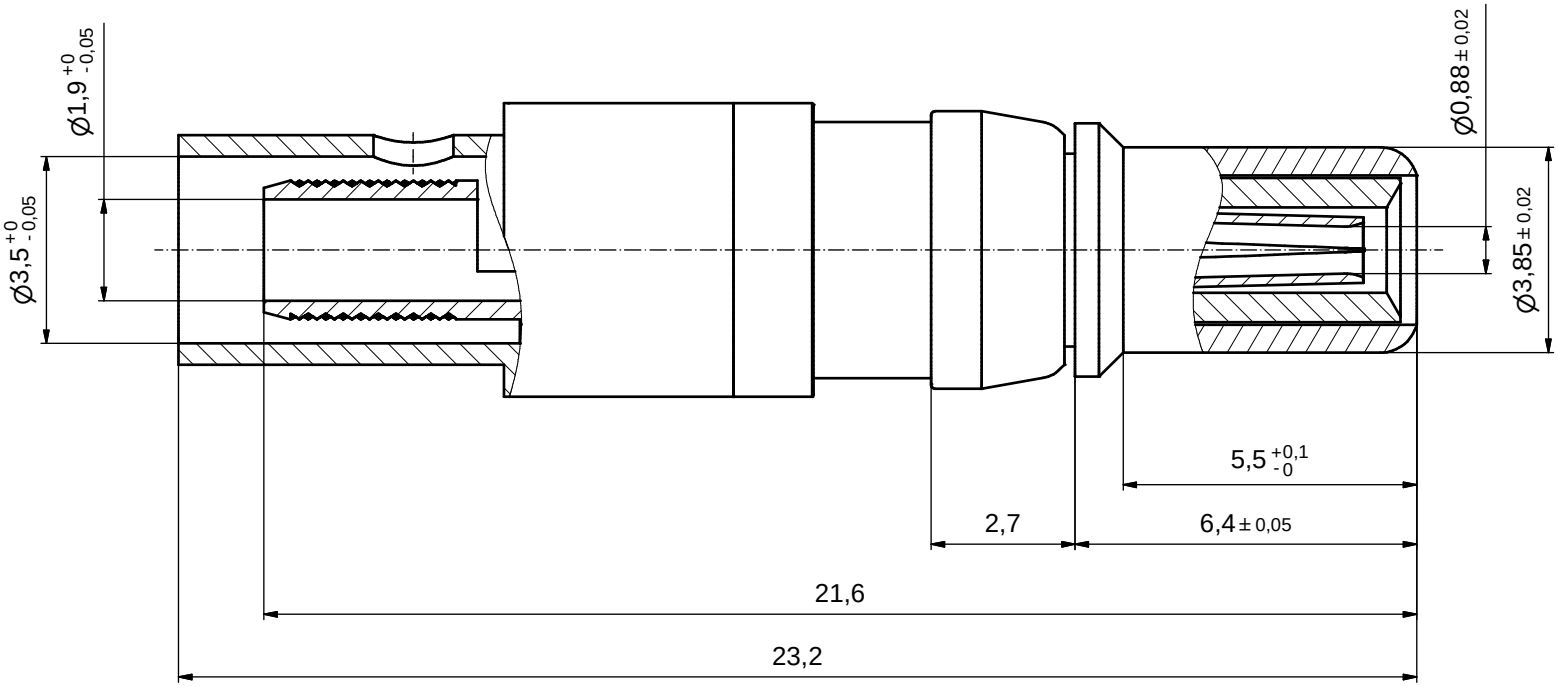

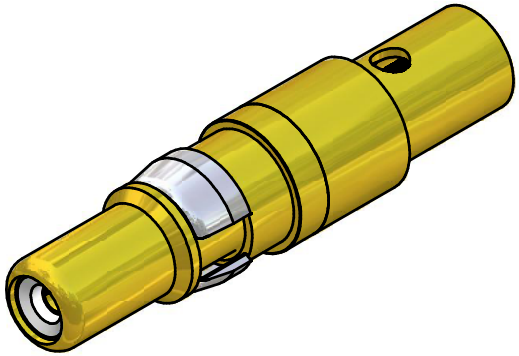

NOTES:

1. PLATING MATING SIDE.
   INNER CONDUCTOR: min. 50µin HARD GOLD over min. 50µin NICKEL
   OUTER CONDUCTOR: min. 30µin HARD GOLD over min. 50µin NICKEL
2. FOR CABLE S2

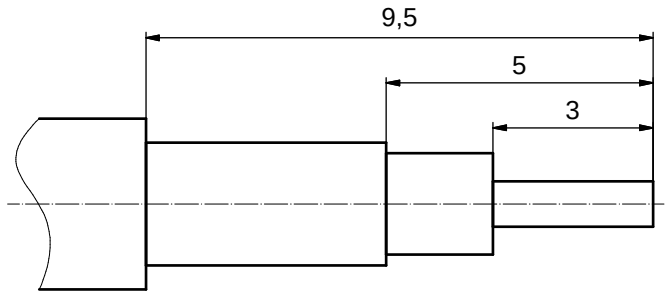

STRIPPING DIMENSIONS

Directive 2002/95/EC „RoHS" Compliant

APPROVAL # FREIGABE # DEBLOCAGE # AUTORIZACION # APPROVAL

CUSTOMER APPROVAL DATE:

NAME: TITLE:

COMPANY NAME:

APPROVAL # FREIGABE # DEBLOCAGE # AUTORIZACION

APPROVAL # FREIGABE # DEBLOCAGE # AUTORIZACION # APPROVAL

THIS DRAWING MAY NOT BE COPIED OR REPRODUCED IN ANY WAY, AND MAY NOT BE PASSED ON TO A THIRD PARTY WITHOUT WRITTEN PERMISSION. OWNERSHIP AND COPYRIGHT OF CONEC GmbH

DO NOT ALTER CAD DRAWING BY HAND

rev.	description	date	name
a	Origin		

tolerance

dim. in mm

	date	name
drawn	20.04.2009	Sonnenberg
appd.	20.04.2009	Fischer
norm		
d-old		

CONEC

scale: 5:1

material:

title:

COAXIAL CONTACT MALE 50 OHM

Inner conductor for solder termination

outer conductor for crimp or solder termination

dwg no: 13K2A030A

Inventor 10

DIN-A3

sh: 1

part no: 131J20059X