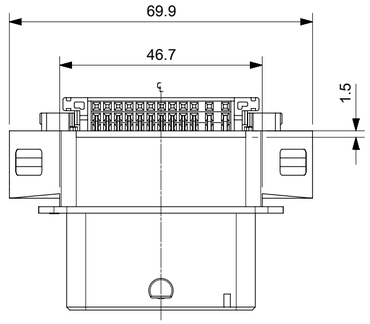

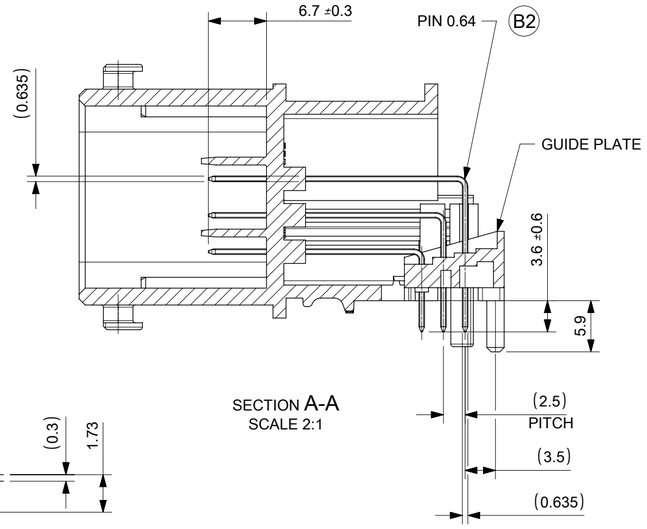

SECTION A-A
SCALE 2:1

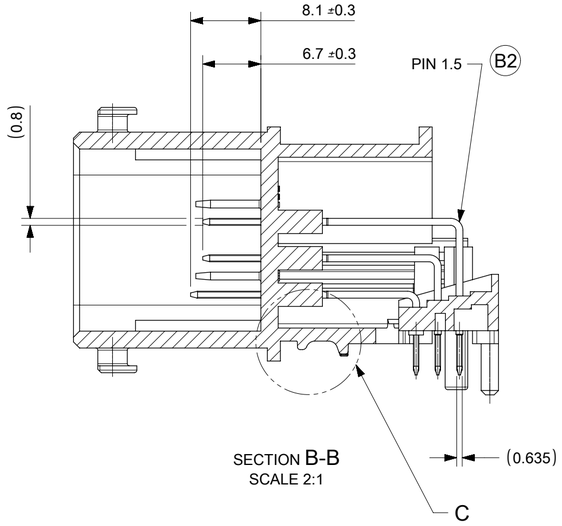

SECTION B-B
SCALE 2:1

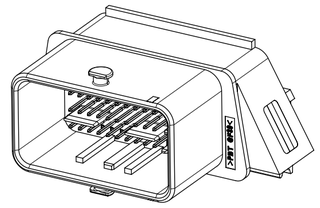

SCALE 1:1

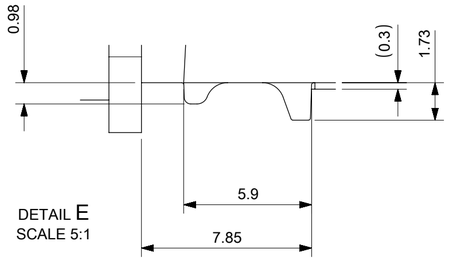

DETAIL E
SCALE 5:1

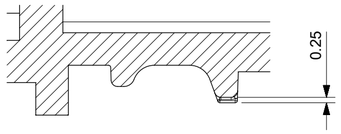

DETAIL C
SCALE 5:1

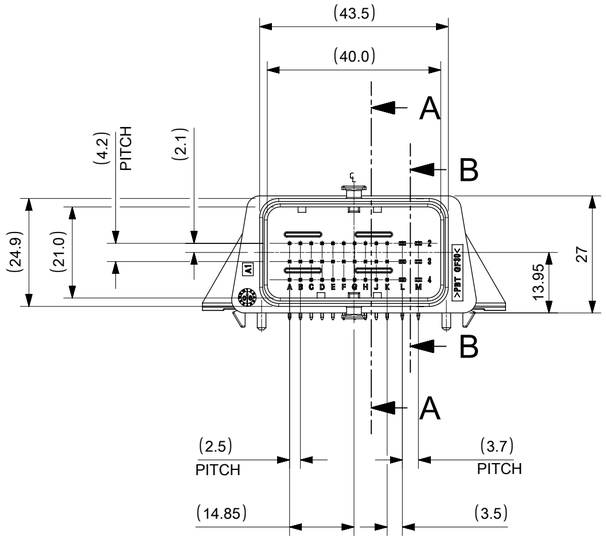

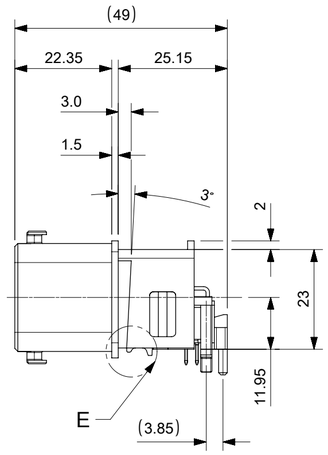

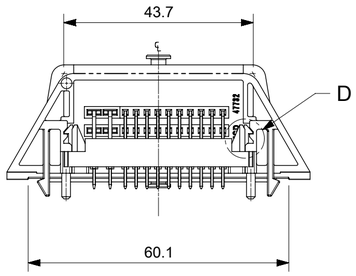

RECOMMENDED PCB LAY-OUT

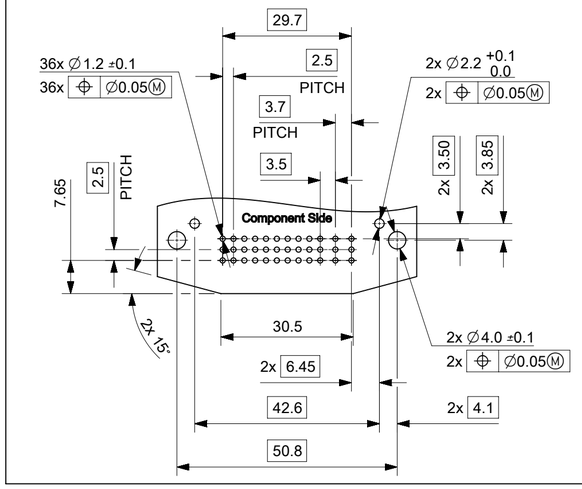

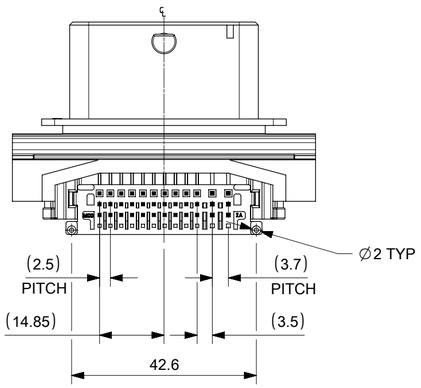

GUIDE PLATE POSITION

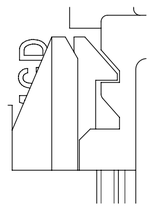

FINAL POSITION
ONCE PCB IS MOUNTED
(DELIVERY POSITION)

DETAIL D
SCALE 5:1

GENERAL TOLERANCE (UNLESS SPECIFIED)	
10 UNDER	±0.20
10 OVER 30 UNDER	±0.25
30 OVER	±0.30

NOTES:

1- HOUSING AND GUIDE PLATE MATERIAL: PBT-GF30, BLACK
B2 2- PIN0.64/1.5 MATERIAL: COPPER ALLOY
3- PIN0.64/1.5 PLATING: Sn PLATING (MATING AREA AND SOLDERING AREA) OVER Ni PLATING
4- RECOMMENDED PCB THICKNESS: 1.60 ±0.1 mm
5- MATE WITH CMC HARNESS RECEPTACLES: 064320-2311 AND 064320-4311

33.53 g	CMC HEADER ASSY 36P	047732-0361
WEIGHT	DESCRIPTION	MATERIAL NUMBER

REV.	EC#	DESCRIPTION
B2	628699	1. UPDATED VIEWS FROM GUIDE PLATE PRE-LOCK TO FINAL LOCK 2. REMOVED STANDALONE VIEW FOR GUIDE PLATE PRE-LOCK
B1	607933	NX -REMASTER
B	GCA2013-0045	ADD MATING PART P/N ON NOTES 5
A	GCA2009-0050	INITIAL RELEASE

THIS DRAWING CONTAINS INFORMATION THAT IS PROPRIETARY TO MOLEX ELECTRONIC TECHNOLOGIES, LLC AND SHOULD NOT BE USED WITHOUT WRITTEN PERMISSION

DIMENSION UNITS	SCALE
mm	1:1

GENERAL TOLERANCES (UNLESS SPECIFIED)
ANGULAR TOL ± 2.0 °
4 PLACES
3 PLACES
2 PLACES
1 PLACE
0 PLACES

DRAFT WHERE APPLICABLE MUST REMAIN WITHIN DIMENSIONS

CURRENT REV DESC: REFER TO REVISION CHANGE LOG FOR DETAILS IN C-2 OF SHEET1

EC NO: 628699
DRWN: HKANG03 2019/12/02
CHK'D: SLAFAURE 2020/01/17
APPR: SLAFAURE 2020/01/17
INITIAL REVISION:
DRWN: TLUO 2009/05/12
APPR: GGLEE 2009/05/27

THIRD ANGLE PROJECTION | DRAWING: A2-SIZE | SERIES: 47732

molex

36CKT (48) RA S CMC HEADER

PRODUCT CUSTOMER DRAWING

DOCUMENT NUMBER	DOC TYPE	DOC PART	REVISION
SD-47732-001	PSD	001	B2

MATERIAL NUMBER	CUSTOMER	SHEET NUMBER
0477320361	GENERAL MARKET	1 OF 1

DOCUMENT STATUS	P1	RELEASE DATE	2020/01/17 12:22:26

FORMAT: master-tb-prod-A2
REVISION: H
DATE: 2018/01/18