CUSTOMER: NORTEL NETWORKS

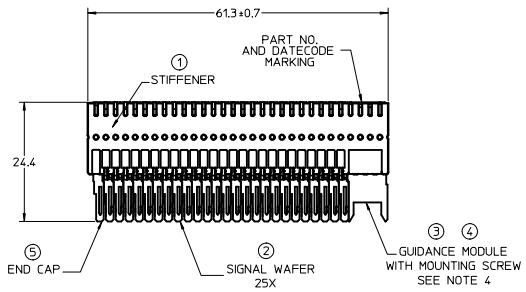

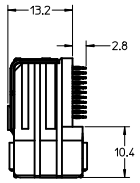

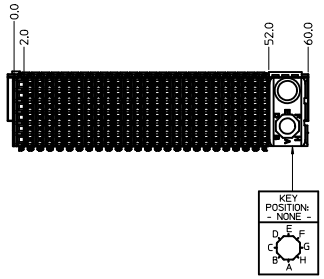

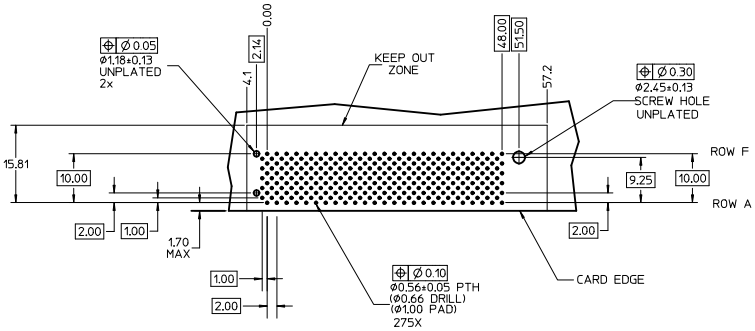

DAUGHTERCARD HOLE PATTERN

(CONNECTOR SIDE)

NOTES: (UNLESS OTHERWISE SPECIFIED)

1. MATERIALS: HOUSING : LIQUID CRYSTAL POLYMER (LCP) GLASS-FILLED, UL94V-0, BLACK.
   TERMINALS: COPPER ALLOY
   STIFFENER: STAINLESS STEEL
2. FINISH: SELECTIVE GOLD (Au) 0.76 micrometer MINIMUM IN CONTACT AREA, SELECTIVE MATTE TIN (Sn) IN TAIL AREA; NICKEL (Ni) UNDERPLATE OVERALL.
3. REFER TO MOLEX PRODUCT SPECIFICATION PS-74031-999 FOR PERFORMANCE SPECIFICATIONS.
4. PACKAGED PER PK-70873-5040 SCREWS PACKED IN BAGS INSIDE OF TUBES.
5. REFER TO MOLEX DOCUMENT SD-74031-002 FOR ADDITIONAL DETAIL ON THE SIGNAL WAFER.
6. REFER TO MOLEX DOCUMENT SD-74037-005 FOR ADDITIONAL DETAIL ON THE GUIDANCE MODULE.
7. REFER TO MOLEX DOCUMENT SD-74038-003 FOR ADDITIONAL DETAIL ON THE END CAP.
8. MARK LABEL WITH PART NUMBER AND DATE CODE. LABEL MAY BE REPLACED BY LASER MARKINGS ON THE STIFFENER.
9. THIS PART CONFORMS TO CLASS B REQUIREMENTS OF MOLEX COSMETIC SPECIFICATION PS-45499-002.

LEAD-FREE PLATING

ITEM	PART NUMBER	DESCRIPTION	QTY
1	74036-0061	STIFFENER	1
2	74031-1051	SIGNAL WAFER, 50 GOLD, LF	25
3	74037-0006	POLARIZING/GUIDE MODULE	1
4	73726-0000	GUIDE MODULE MNTG SCREW	1
5	74038-0002	END CAP WITH PEGS	1

CHG TO LEAD-FREE
EC NO: UCP2012-1775
DRWN:GES 2011/11/15
CHKD:SDANNELLEY 2011/11/15
APPR:SMILLER 2011/12/19
REV B
DESCRIPTION

QUALITY SYMBOLS
E =0
E =0
E =0

GENERAL TOLERANCES (UNLESS SPECIFIED)

	mm	INCH
4 PLACES	± ---	± ---
3 PLACES	± ---	± ---
2 PLACES	± 0.25	± ---
1 PLACE	± 0.38	± ---

ANGULAR ±1/2°

DRAFT WHERE APPLICABLE MUST REMAIN WITHIN DIMENSIONS

DIMENSION STYLE: MM ONLY
SCALE: 2:1
DESIGN UNITS: METRIC
THIRD ANGLE PROJECTION

DRAWN BY: JJONIAK DATE: 03/07/03
CHECKED BY: JLAURX DATE: 03/07/03
APPROVED BY: SMILLER DATE: 2011/12/19

TITLE: 6 ROW VHDM, LF DAUGHTERCARD SALES DRAWING

molex MOLEX INCORPORATED

MATERIAL NO.: 74030-0815
DOCUMENT NO.: SD-74030-815
SHEET NO.: 1 OF 1
SIZE: D

THIS DRAWING CONTAINS INFORMATION THAT IS PROPRIETARY TO MOLEX INCORPORATED AND SHOULD NOT BE USED WITHOUT WRITTEN PERMISSION

tb_frame_D_P_AM_T
Rev. F 2009/06/17