Ultrafast Rectifier, 30 A FRED Pt®

TO-247AC

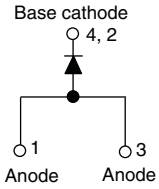

VS-APU3006HN3

TO-247AC modified

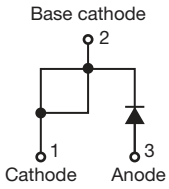

VS-EPU3006HN3

FEATURES

- Low forward voltage drop
- Ultrafast recovery time
- 175 °C operating junction temperature
- AEC-Q101 qualified
- Meets JESD 201 class 1 whisker test
- Material categorization: for definitions of compliance please see www.vishay.com/doc?99912

Pb-free
e3
RoHS COMPLIANT
HALOGEN FREE

DESCRIPTION

Ultralow V_F, soft-switching ultrafast rectifiers optimized for Discontinuous (Critical) Mode (DCM) Power Factor Correction (PFC).

The minimized conduction loss, optimized stored charge and low recovery current minimized the switching losses and reduce over dissipation in the switching element and snubbers.
The device is also intended for use as a freewheeling diode in power supplies and other power switching applications.

APPLICATIONS

AC/DC SMPS 70 W to 400 W
e.g. laptop and printer AC adaptors, desktop PC, TV and monitor, games units, and DVD AC/DC power supplies.

PRODUCT SUMMARY	
Package	TO-247AC, TO-247AC modified (2 pins)
$I_{F(AV)}$	30 A
V_R	600 V
V_F at I_F	1.15 V
t_{rr} typ.	30 ns
T_J max.	175 °C
Diode variation	Single die

ABSOLUTE MAXIMUM RATINGS

PARAMETER	SYMBOL	TEST CONDITIONS	MAX.	UNITS
Repetitive peak reverse voltage	V_{RRM}		600	V
Average rectified forward current	$I_{F(AV)}$	T_C = 127 °C	30	A
Non-repetitive peak surge current	I_{FSM}	T_C = 25 °C	220	
Operating junction and storage temperatures	T_J, T_{Stg}		-65 to +175	°C

ELECTRICAL SPECIFICATIONS (T_J = 25 °C unless otherwise specified)

PARAMETER	SYMBOL	TEST CONDITIONS	MIN.	TYP.	MAX.	UNITS
Breakdown voltage, blocking voltage	V_{BR}, V_R	I_R = 100 µA	600	-	-	V
Forward voltage	V_F	I_F = 30 A	-	1.4	2	
		I_F = 30 A, T_J = 150 °C	-	1.15	1.35	
Reverse leakage current	I_R	V_R = V_R rated	-	-	30	µA
		T_J = 150 °C, V_R = V_R rated	-	-	250	
Junction capacitance	C_T	V_R = 600 V	-	20	-	pF
Series inductance	L_S	Measured lead to lead 5 mm from package body	-	8.0	-	nH

For technical questions within your region: DiodesAmericas@vishay.com, DiodesAsia@vishay.com, DiodesEurope@vishay.com
THIS DOCUMENT IS SUBJECT TO CHANGE WITHOUT NOTICE. THE PRODUCTS DESCRIBED HEREIN AND THIS DOCUMENT ARE SUBJECT TO SPECIFIC DISCLAIMERS, SET FORTH AT www.vishay.com/doc?91000

DYNAMIC RECOVERY CHARACTERISTICS (T_J = 25 °C unless otherwise specified)							
PARAMETER	**SYMBOL**	**TEST CONDITIONS**		**MIN.**	**TYP.**	**MAX.**	**UNITS**
Reverse recovery time	t_{rr}	I_F = 1 A, dI_F/dt = 50 A/μs, V_R = 30 V		-	30	-	ns
		T_J = 25 °C	I_F = 30 A dI_F/dt = 200 A/μs V_R = 200 V	-	45	-	
		T_J = 125 °C		-	100	-	
Peak recovery current	I_{RRM}	T_J = 25 °C		-	5.6	-	A
		T_J = 125 °C		-	10	-	
Reverse recovery charge	Q_{rr}	T_J = 25 °C		-	127	-	nC
		T_J = 125 °C		-	580	-	

THERMAL - MECHANICAL SPECIFICATIONS						
PARAMETER	**SYMBOL**	**TEST CONDITIONS**	**MIN.**	**TYP.**	**MAX.**	**UNITS**
Maximum junction and storage temperature range	T_J, T_{Stg}		-65	-	175	°C
Thermal resistance, junction to case	R_{thJC}		-	0.7	1.1	°C/W
Thermal resistance, junction to ambient per leg	R_{thJA}	Typical socket mount	-	-	70	
Thermal resistance, case to heatsink	R_{thCS}	Mounting surface, flat, smooth and greased	-	0.5	-	
Weight			-	2.0	-	g
			-	0.07	-	oz.
Mounting torque			1.2 (10)	-	2.4 (20)	kgf · cm (lbf · in)
Marking device		Case style TO-247AC	APU3006H			
		Case style TO-247AC modified	EPU3006H			

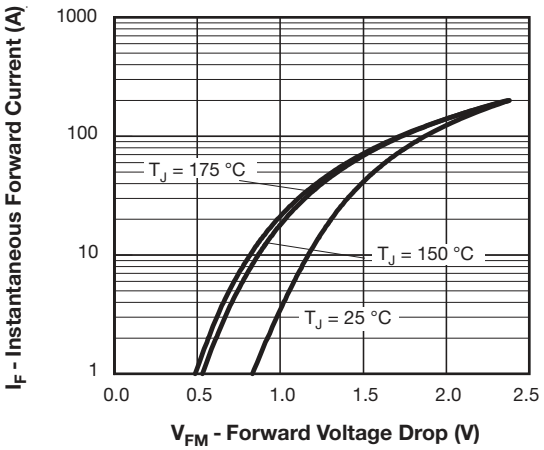

Fig. 1 - Typical Forward Voltage Drop Characteristics

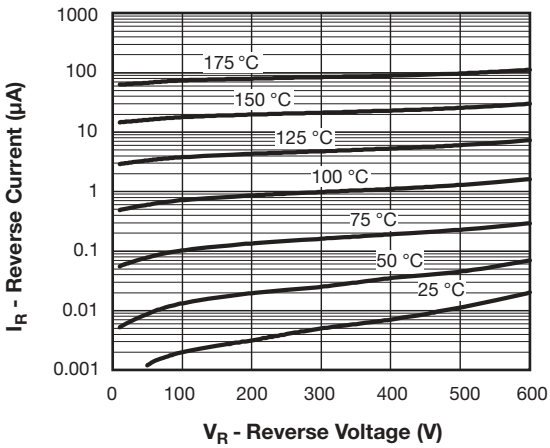

Fig. 2 - Typical Values of Reverse Current vs. Reverse Voltage

For technical questions within your region: DiodesAmericas@vishay.com, DiodesAsia@vishay.com, DiodesEurope@vishay.com
THIS DOCUMENT IS SUBJECT TO CHANGE WITHOUT NOTICE. THE PRODUCTS DESCRIBED HEREIN AND THIS DOCUMENT ARE SUBJECT TO SPECIFIC DISCLAIMERS, SET FORTH AT www.vishay.com/doc?91000

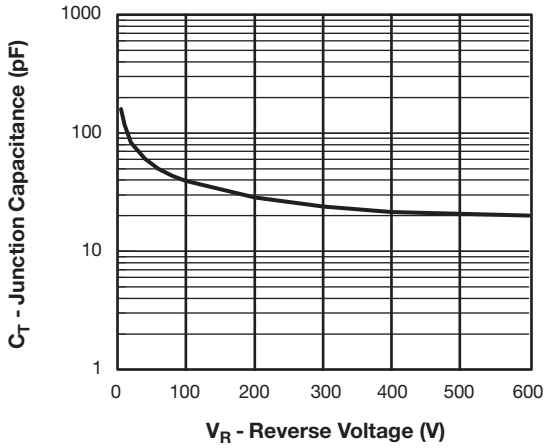

Fig. 3 - Typical Junction Capacitance vs. Reverse Voltage

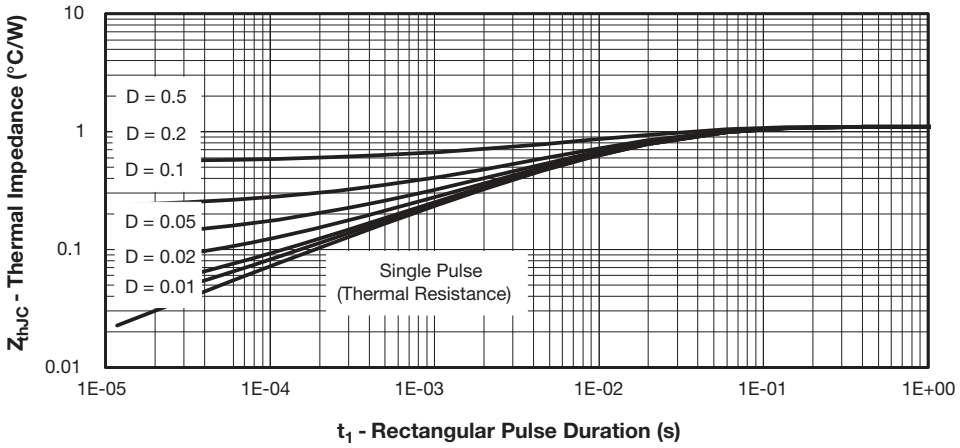

Fig. 4 - Max. Thermal Impedance Z_{thJC} Characteristics

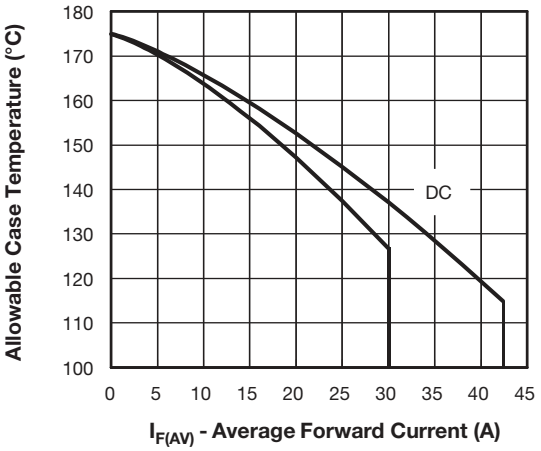

Fig. 5 - Maximum Allowable Case Temperature vs. Average Forward Current

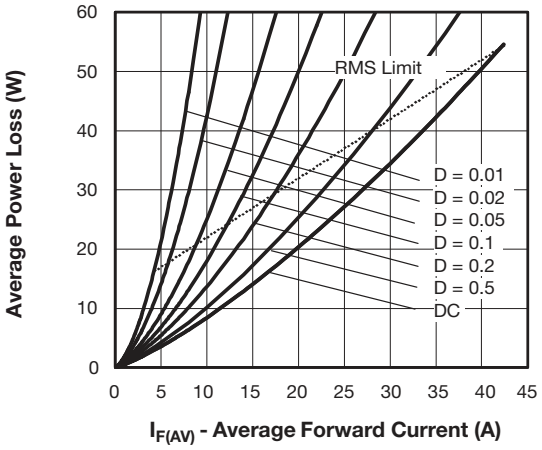

Fig. 6 - Forward Power Loss Characteristics

For technical questions within your region: DiodesAmericas@vishay.com, DiodesAsia@vishay.com, DiodesEurope@vishay.com
THIS DOCUMENT IS SUBJECT TO CHANGE WITHOUT NOTICE. THE PRODUCTS DESCRIBED HEREIN AND THIS DOCUMENT ARE SUBJECT TO SPECIFIC DISCLAIMERS, SET FORTH AT www.vishay.com/doc?91000

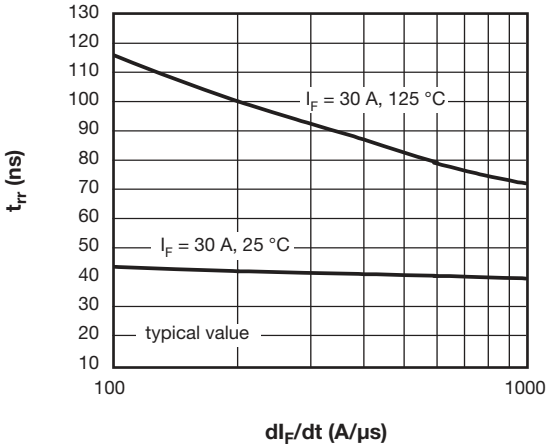

Fig. 7 - Typical Reverse Recovery Time vs. dI_F/dt

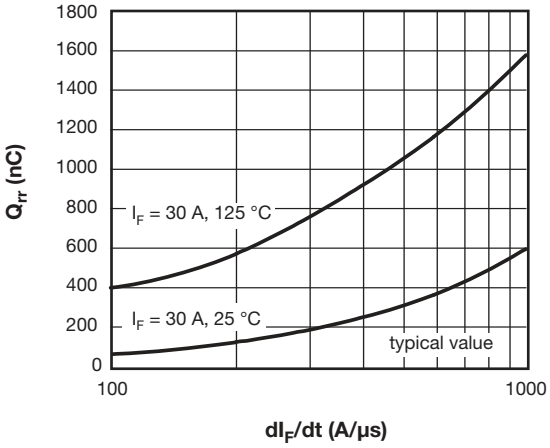

Fig. 8 - Typical Stored Charge vs. dI_F/dt

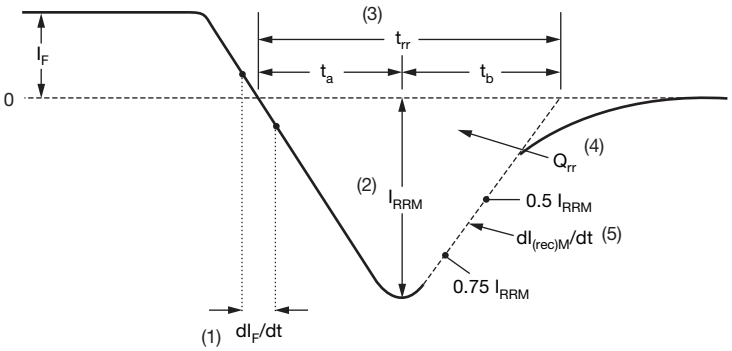

(1) dI_F/dt - rate of change of current through zero crossing

(2) I_{RRM} - peak reverse recovery current

(3) t_{rr} - reverse recovery time measured from zero crossing point of negative going I_F to point where a line passing through 0.75 I_{RRM} and 0.50 I_{RRM} extrapolated to zero current.

(4) Q_{rr} - area under curve defined by t_{rr} and I_{RRM}

$$Q_{rr} = \frac{t_{rr} \times I_{RRM}}{2}$$

(5) $dI_{(rec)M}/dt$ - peak rate of change of current during t_b portion of t_{rr}

Fig. 9 - Reverse Recovery Waveform and Definitions

For technical questions within your region: DiodesAmericas@vishay.com, DiodesAsia@vishay.com, DiodesEurope@vishay.com
THIS DOCUMENT IS SUBJECT TO CHANGE WITHOUT NOTICE. THE PRODUCTS DESCRIBED HEREIN AND THIS DOCUMENT ARE SUBJECT TO SPECIFIC DISCLAIMERS, SET FORTH AT www.vishay.com/doc?91000

ORDERING INFORMATION TABLE

Device code	VS-	E	P	U	30	06	H	N3
	1	2	3	4	5	6	7	8

1 - Vishay Semiconductors product

2 - Ultrafast MUR series
- A = single diode
- E = single diode (modified)

3 - P = TO-247AC

4 - U = ultrafast recovery time

5 - Current code (30 = 30 A)

6 - Voltage code (06 = 600 V)

7 - H = AEC-Q101 qualified

8 - Environmental digit:
N3 = halogen-free, RoHS-compliant, and totally lead (Pb)-free

ORDERING INFORMATION (Example)			
PREFERRED P/N	**QUANTITY PER TUBE**	**MINIMUM ORDER QUANTITY**	**PACKAGING DESCRIPTION**
VS-APU3006HN3	25	500	Antistatic plastic tube
VS-EPU3006HN3	25	500	Antistatic plastic tube

LINKS TO RELATED DOCUMENTS		
Dimensions	TO-247AC	www.vishay.com/doc?95223
	TO-247AC modified	www.vishay.com/doc?95253
Part marking information	TO-247AC	www.vishay.com/doc?95007
	TO-247AC modified	www.vishay.com/doc?95442

For technical questions within your region: DiodesAmericas@vishay.com, DiodesAsia@vishay.com, DiodesEurope@vishay.com
THIS DOCUMENT IS SUBJECT TO CHANGE WITHOUT NOTICE. THE PRODUCTS DESCRIBED HEREIN AND THIS DOCUMENT ARE SUBJECT TO SPECIFIC DISCLAIMERS, SET FORTH AT www.vishay.com/doc?91000

TO-247AC

DIMENSIONS in millimeters and inches

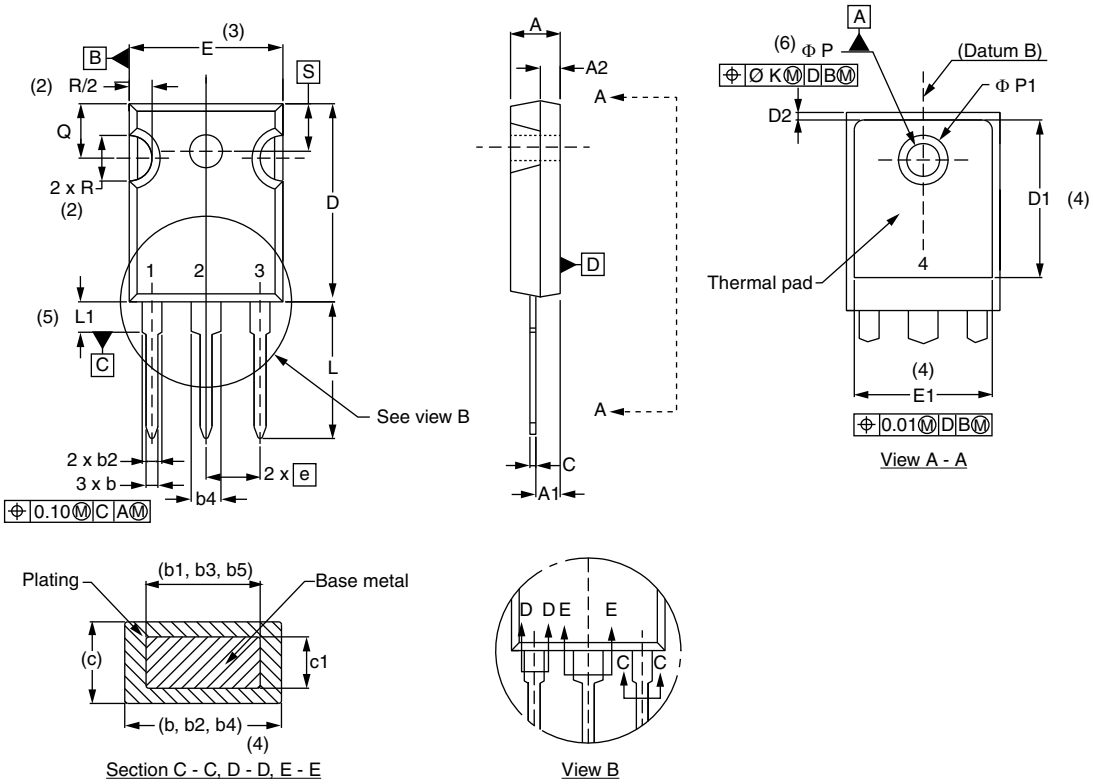

SYMBOL	MILLIMETERS		INCHES		NOTES
	MIN.	MAX.	MIN.	MAX.	
A	4.65	5.31	0.183	0.209	
A1	2.21	2.59	0.087	0.102	
A2	1.50	2.49	0.059	0.098	
b	0.99	1.40	0.039	0.055	
b1	0.99	1.35	0.039	0.053	
b2	1.65	2.39	0.065	0.094	
b3	1.65	2.34	0.065	0.092	
b4	2.59	3.43	0.102	0.135	
b5	2.59	3.38	0.102	0.133	
c	0.38	0.89	0.015	0.035	
c1	0.38	0.84	0.015	0.033	
D	19.71	20.70	0.776	0.815	3
D1	13.08	-	0.515	-	4

SYMBOL	MILLIMETERS		INCHES		NOTES
	MIN.	MAX.	MIN.	MAX.	
D2	0.51	1.30	0.020	0.051	
E	15.29	15.87	0.602	0.625	3
E1	13.46	-	0.530	-	
e	5.46 BSC		0.215 BSC		
Ø K	0.254		0.010		
L	14.20	16.10	0.559	0.634	
L1	3.71	4.29	0.146	0.169	
Ø P	3.56	3.66	0.14	0.144	
Ø P1	-	6.98	-	0.275	
Q	5.31	5.69	0.209	0.224	
R	4.52	5.49	0.178	0.216	
S	5.51 BSC		0.217 BSC		

Notes

(1) Dimensioning and tolerancing per ASME Y14.5M-1994

(2) Contour of slot optional

(3) Dimension D and E do not include mold flash. Mold flash shall not exceed 0.127 mm (0.005") per side. These dimensions are measured at the outermost extremes of the plastic body

(4) Thermal pad contour optional with dimensions D1 and E1

(5) Lead finish uncontrolled in L1

(6) Ø P to have a maximum draft angle of 1.5 to the top of the part with a maximum hole diameter of 3.91 mm (0.154")

(7) Outline conforms to JEDEC® outline TO-247 with exception of dimension c

For technical questions within your region: DiodesAmericas@vishay.com, DiodesAsia@vishay.com, DiodesEurope@vishay.com

THIS DOCUMENT IS SUBJECT TO CHANGE WITHOUT NOTICE. THE PRODUCTS DESCRIBED HEREIN AND THIS DOCUMENT ARE SUBJECT TO SPECIFIC DISCLAIMERS, SET FORTH AT www.vishay.com/doc?91000

TO-247AC modified

DIMENSIONS in millimeters and inches

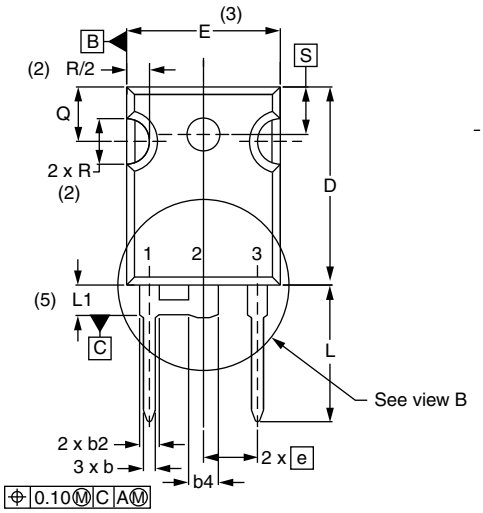

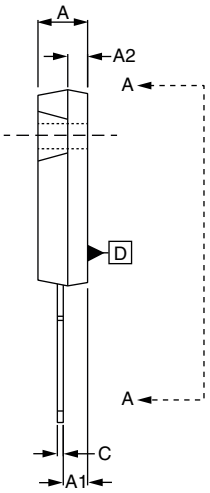

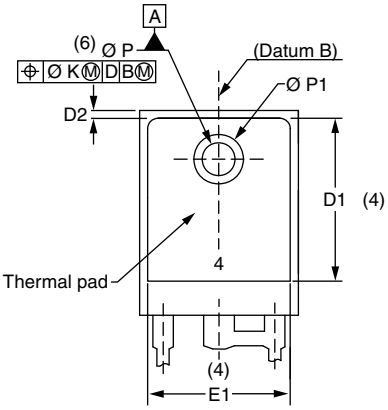

View A - A

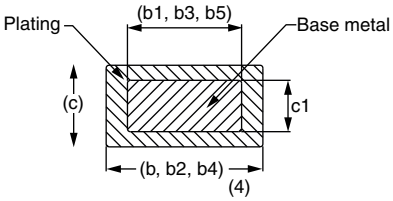

Section C - C, D - D, E - E

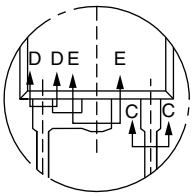

View B

SYMBOL	MILLIMETERS		INCHES		NOTES
	MIN.	MAX.	MIN.	MAX.	
A	4.65	5.31	0.183	0.209	
A1	2.21	2.59	0.087	0.102	
A2	1.50	2.49	0.059	0.098	
b	0.99	1.40	0.039	0.055	
b1	0.99	1.35	0.039	0.053	
b2	1.65	2.39	0.065	0.094	
b3	1.65	2.34	0.065	0.092	
b4	2.59	3.43	0.102	0.135	
b5	2.59	3.38	0.102	0.133	
c	0.38	0.89	0.015	0.035	
c1	0.38	0.84	0.015	0.033	
D	19.71	20.70	0.776	0.815	3
D1	13.08	-	0.515	-	4

SYMBOL	MILLIMETERS		INCHES		NOTES
	MIN.	MAX.	MIN.	MAX.	
D2	0.51	1.30	0.020	0.051	
E	15.29	15.87	0.602	0.625	3
E1	13.46	-	0.530	-	
e	5.46 BSC		0.215 BSC		
Ø K	0.254		0.010		
L	14.20	16.10	0.559	0.634	
L1	3.71	4.29	0.146	0.169	
Ø P	3.56	3.66	0.14	0.144	
Ø P1	-	6.98	-	0.275	
Q	5.31	5.69	0.209	0.224	
R	4.52	5.49	0.178	0.216	
S	5.51 BSC		0.217 BSC		

Notes

(1) Dimensioning and tolerance per ASME Y14.5M-1994

(2) Contour of slot optional

(3) Dimension D and E do not include mold flash. Mold flash shall not exceed 0.127 mm (0.005") per side. These dimensions are measured at the outermost extremes of the plastic body

(4) Thermal pad contour optional with dimensions D1 and E1

(5) Lead finish uncontrolled in L1

(6) Ø P to have a maximum draft angle of 1.5 to the top of the part with a maximum hole diameter of 3.91 mm (0.154")

(7) Outline conforms to JEDEC® outline TO-247 with exception of dimension c

For technical questions within your region: DiodesAmericas@vishay.com, DiodesAsia@vishay.com, DiodesEurope@vishay.com

THIS DOCUMENT IS SUBJECT TO CHANGE WITHOUT NOTICE. THE PRODUCTS DESCRIBED HEREIN AND THIS DOCUMENT ARE SUBJECT TO SPECIFIC DISCLAIMERS, SET FORTH AT www.vishay.com/doc?91000

Disclaimer

ALL PRODUCT, PRODUCT SPECIFICATIONS AND DATA ARE SUBJECT TO CHANGE WITHOUT NOTICE TO IMPROVE RELIABILITY, FUNCTION OR DESIGN OR OTHERWISE.

Vishay Intertechnology, Inc., its affiliates, agents, and employees, and all persons acting on its or their behalf (collectively, “Vishay”), disclaim any and all liability for any errors, inaccuracies or incompleteness contained in any datasheet or in any other disclosure relating to any product.

Vishay makes no warranty, representation or guarantee regarding the suitability of the products for any particular purpose or the continuing production of any product. To the maximum extent permitted by applicable law, Vishay disclaims (i) any and all liability arising out of the application or use of any product, (ii) any and all liability, including without limitation special, consequential or incidental damages, and (iii) any and all implied warranties, including warranties of fitness for particular purpose, non-infringement and merchantability.

Statements regarding the suitability of products for certain types of applications are based on Vishay's knowledge of typical requirements that are often placed on Vishay products in generic applications. Such statements are not binding statements about the suitability of products for a particular application. It is the customer's responsibility to validate that a particular product with the properties described in the product specification is suitable for use in a particular application. Parameters provided in datasheets and / or specifications may vary in different applications and performance may vary over time. All operating parameters, including typical parameters, must be validated for each customer application by the customer's technical experts. Product specifications do not expand or otherwise modify Vishay's terms and conditions of purchase, including but not limited to the warranty expressed therein.

Hyperlinks included in this datasheet may direct users to third-party websites. These links are provided as a convenience and for informational purposes only. Inclusion of these hyperlinks does not constitute an endorsement or an approval by Vishay of any of the products, services or opinions of the corporation, organization or individual associated with the third-party website. Vishay disclaims any and all liability and bears no responsibility for the accuracy, legality or content of the third-party website or for that of subsequent links.

Except as expressly indicated in writing, Vishay products are not designed for use in medical, life-saving, or life-sustaining applications or for any other application in which the failure of the Vishay product could result in personal injury or death. Customers using or selling Vishay products not expressly indicated for use in such applications do so at their own risk. Please contact authorized Vishay personnel to obtain written terms and conditions regarding products designed for such applications.

No license, express or implied, by estoppel or otherwise, to any intellectual property rights is granted by this document or by any conduct of Vishay. Product names and markings noted herein may be trademarks of their respective owners.

© 2023 VISHAY INTERTECHNOLOGY, INC. ALL RIGHTS RESERVED