NOTICE OF PROPRIETARY RIGHTS THIS DOCUMENT CONTAINS CONFIDENTIAL DATA, INCLUDING TRADE SECRETS, PROPRIETARY TO TIMES MICROWAVE SYSTEMS. DISCLOSURE OF THIS DATA IS EXPRESSLY CONDITIONED UPON YOUR ASSENT THAT ITS USE IS LIMITED TO USE WITHN YOUR COMPANY ONLY. ANY OTHER USE IS STRICTLY PROHIBITED WITHOUT THE PRIOR WRITTEN CONSENT OF TIMES MICROWAVE SYSTEMS.

SYM	REVISION DESCRIPTION	DFTM	DATE	APPD	APPD
A	RELEASED FOR PRODUCTION	Joslen	2016.12.09	TZ	2016.12.09

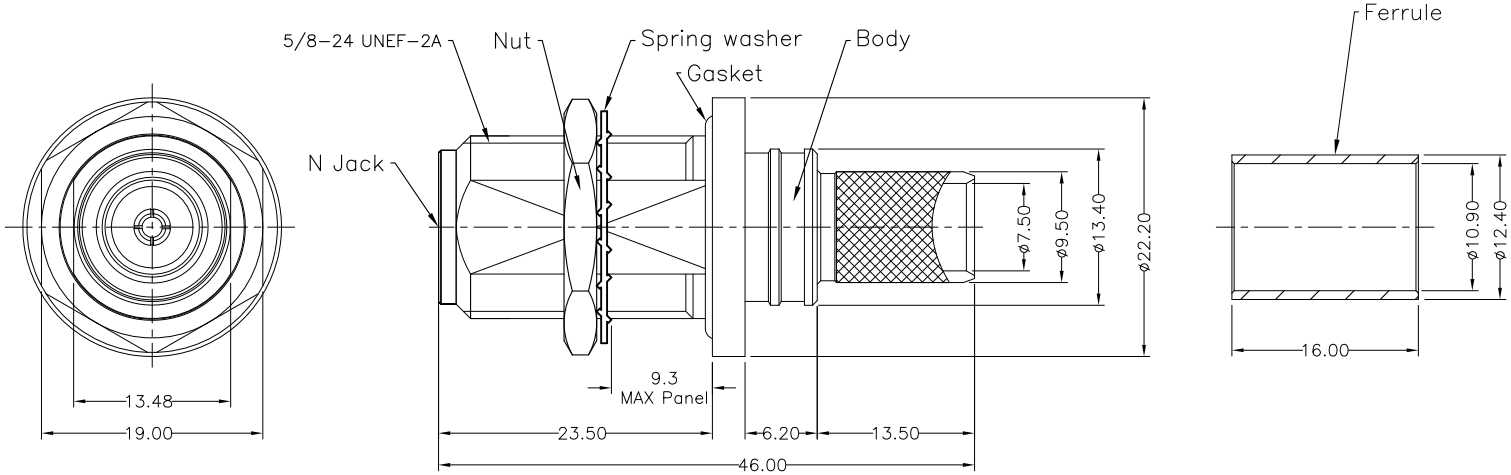

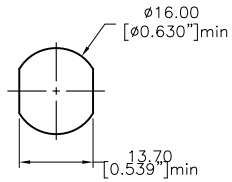

RECOMMENDED MOUNTING HOLE

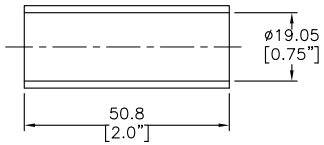

Shrink Tube (1/2"x1.5" 3:1)

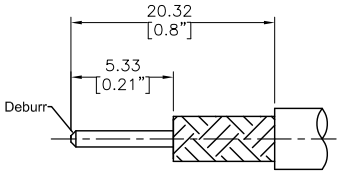

RECOMMENDED CABLE STRIPPING DIM'S
Connector adds: 24.5 mm

I. MATERIALS & FINISHES

Components	Materials	Finishes	Thk. (µ")
Body	Brass	Albaloy	80
Center Cont.	QBe2	Gold	50
Ferrule	Brass	Albaloy	80
Nut	Brass	Albaloy	80
Insulator	PTFE	–	–
Gaskt	Silicone	–	–

II. ELECTRICAL PROPERTIES

Impedance (Ω):	50
Frequency Range (GHz):	DC to 6 GHz
Working Voltage (V):	2500
Insulation Resistance (MΩ):	≥10000
VSWR:	≤1.30
Insertion Loss(dB, f/GHz):	$-0.1x\sqrt{f}$

III. ENVIRONMENT PROPERTIES

Temperature Range:	-40°c~+125°c
Thermal Shock:	MIL-STD 202G, Meth.107, Cond.B
Vibration:	MIL-STD 202G, Meth.204, Cond.B
Shock:	MIL-STD 202G, Meth.213, Cond I
Climatic Class:	IEC 60068 55/155/56
(2002/95/EC)RoHS:	Compliant

IV. MECHANICAL PROPERTIES

Center Cont.:	Finger Contact
Outer Cont.:	Crimp
Coupling Nut Torque (N.m):	1.7
Cbl-Connector Retention Force (N):	500
Durability (cycles):	500

V. TOOLING

Stripping Tool: 3192-004/CST-400
Crimping Tool: 3190-202/CT-400/300

According to Standard: IEC 61169-16

MATL:	UNLESS OTHERWISE SPECIFIED	DFTM. Joslen	TIMES MICROWAVE SYSTEMS An Amphenol Company
	ALL DIMENSIONS ARE IN mm MACHINED SURFACES FINISH 1.6 RMS MAX. REMOVE ALL BURRS 0.15X45˚ MAX. BREAK MACHINE CORNERS 0.15X45˚ D MAX. FILLET R. TOLERANCES ON DECIMALS .X ±0.3 .XX ±0.15 ANGLES ±2° FRACTIONS ± N/A	DATE 2016.12.09	
		CHKD KG	**EZ-400-NF-BH-X**
		DATE 2016.12.09	Type N Female (Jack) Straight Non-Solder Pin No Braid Trim Connector for LMR-400 Cable
USED ON: O		APPD TZ	
SCALE: N/A / DWG SIZE A4	DO NOT SCALE DRAWING / CODE IDENT 68999	DATE 2016.12.09	SHT 1 OF 1 / 3190-6328 / REV A