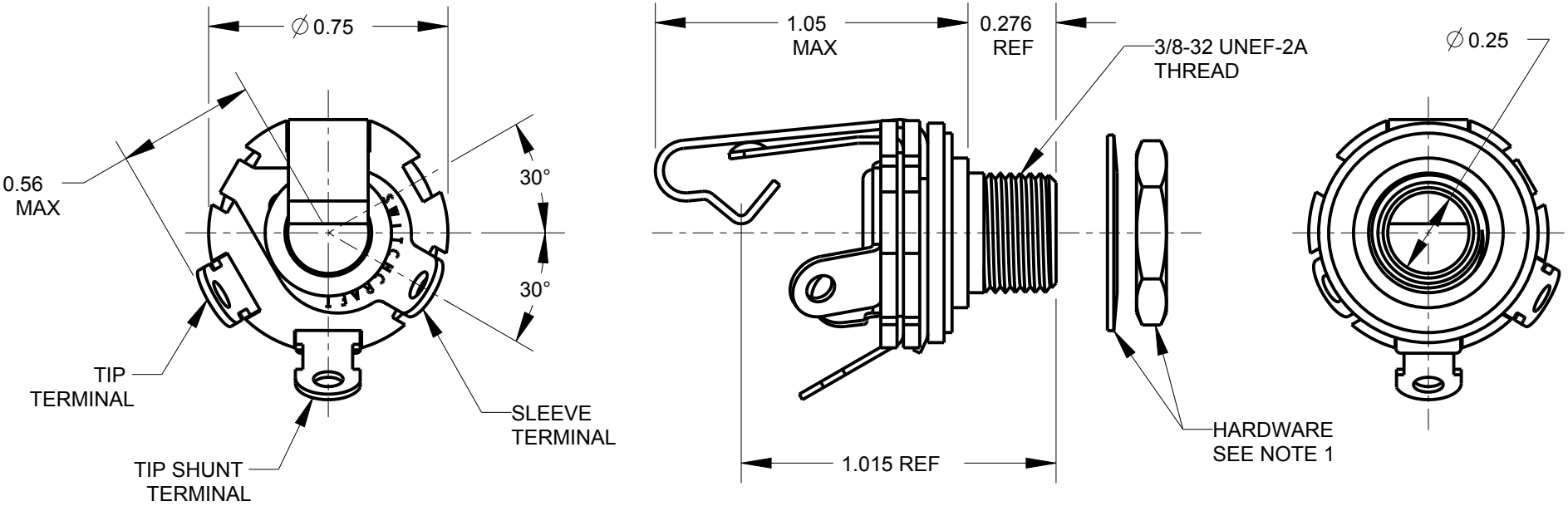

NOTES:

1. HARDWARE SHIPPED UNASSEMBLED.
   K178 WASHER AND K180 HEX NUT.

2. MATERIALS:
   BUSHING - BRASS, NICKEL PLATED
   INSULATING WASHERS - PHENOLIC
   SLEEVE TERMINAL - BRASS, HOT TIN COATED
   (E) TIP & SHUNT SPRINGS - COPPER ALLOY, SILVER PLATED
   METAL WASHERS - STEEL, NICKEL PLATED
   HEX NUT - BRASS, NICKEL PLATED

3. THIS PRODUCT IS RoHS COMPLIANT.

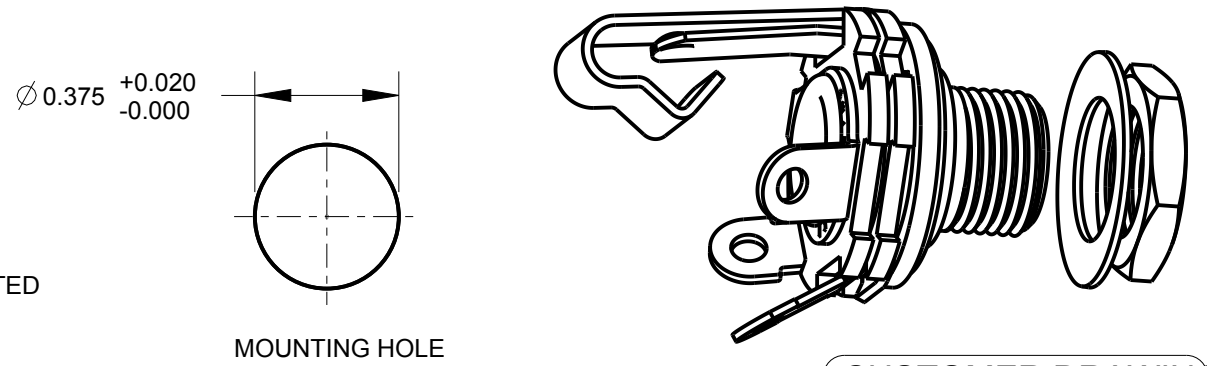

CUSTOMER DRAWING

REV	ECO NUMBER	DATE	BY	APVD
E	REDRAWN - 26696	1-20-11	TJK	TJK

REVISIONS

☆ STAR SYMBOL DENOTES CRITICAL DIMENSION

UNLESS OTHERWISE SPECIFIED

1. ALL DIMENSIONS IN INCHES
   -TWO PLACE DECIMALS ±0.01
   -THREE PLACE DECIMALS ±0.005
   -ANGLES ±1°
   -ALL DIA. CONCENTRIC WITHIN 0.005 T.I.R.
2. FEATURES ON THE SAME CENTERLINE MUST BE ALIGNED WITHIN ±0.002
3. REMOVE ALL BURRS

DO NOT SCALE DRAWING

THIS DRAWING DESCRIBES A DESIGN CONSIDERED PROPRIETARY IN NATURE, DEVELOPED AND MANUFACTURED BY SWITCHCRAFT INC. AND IS RELEASED ON A CONFIDENTIAL BASIS FOR IDENTIFICATION PURPOSES ONLY.

SIZE	WIDTH	MULT	LBS/M	TEMPER

FINISH
SPEC No.

MATERIAL
SPEC No.

FIRST USED ON

SCALE 2:1

DATE DRAWN	BY	CHKD	APVD
8-26-94	WJS	CJD 5-27-64	LG 6-2-64

Switchcraft®

SHEET 1 OF 1

NAME 2 CONDUCTOR 1/4" LITTEL JAX, RoHS

PART No. 12A

REV E

Pro/Engineer CAD File

A