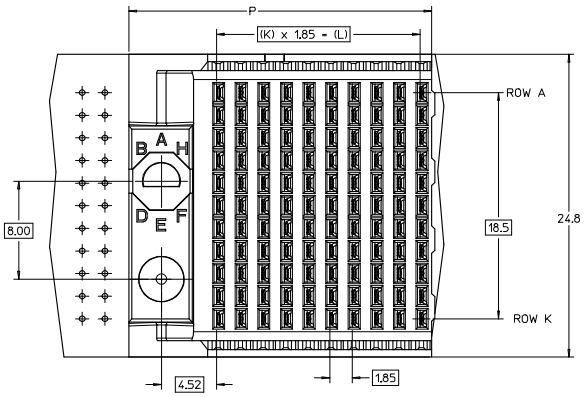

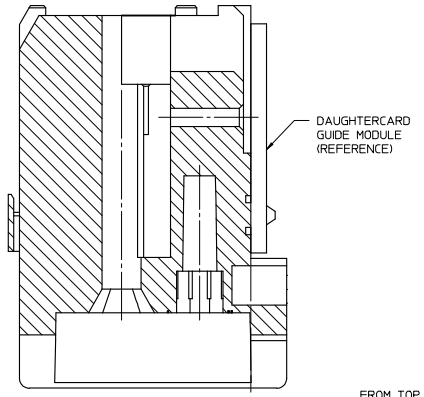

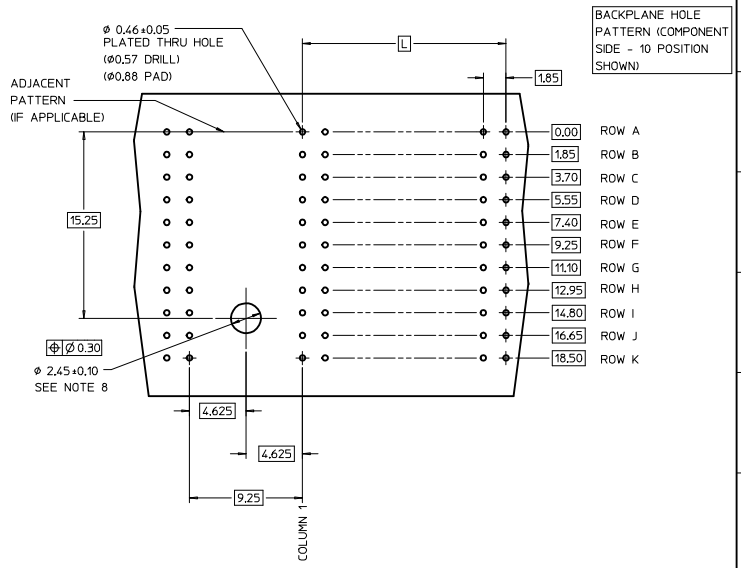

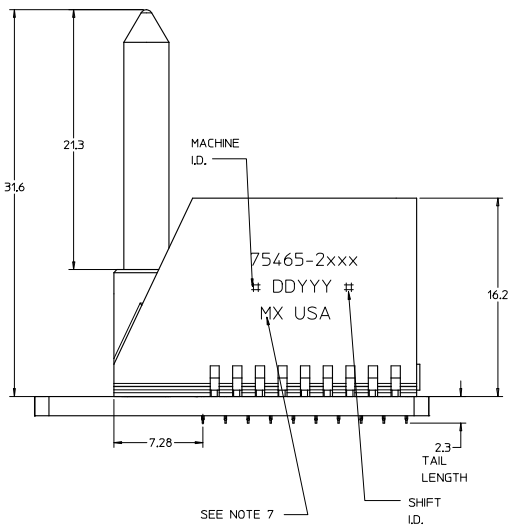

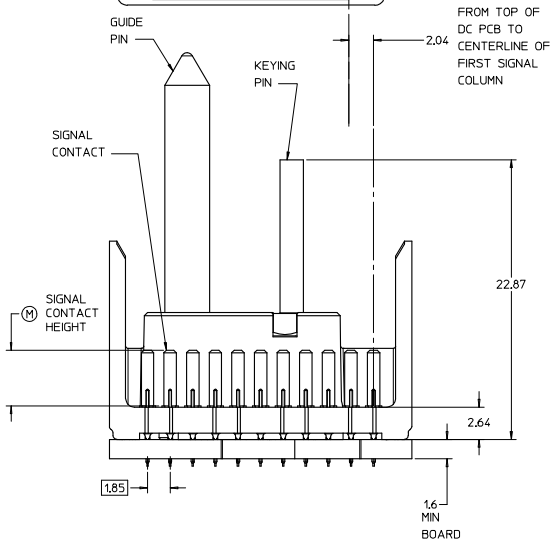

P/N 75465-( )	-**0*	-**1*	-**2*	-**3*	-**4*	-**5*	-**6*	-**7*	-**8*
	0	A	B	C	D	E	F	G	H
KEYING PIN ORIENTATION									

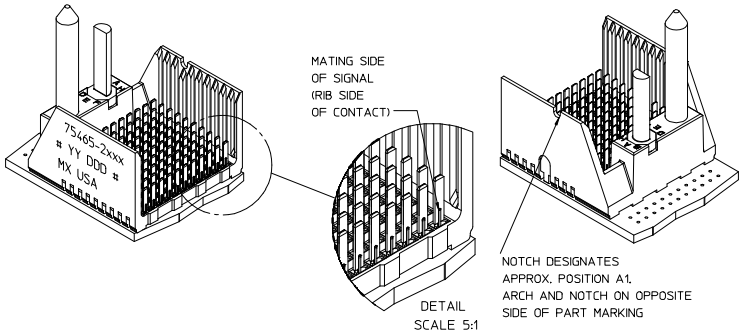

THE PRIMARY CARTON WITH A LABEL STATING "ELV AND RoHS COMPLAINT" IS LEAD FREE. CARTONS WITHOUT THIS LABEL MAY CONTAIN LEAD.

NOTES:

1. MATERIAL: HOUSING - LIQUID CRYSTAL POLYMER (LCP) GLASS-FILLED. UL 94V-0. COLOR - GRAY. SIGNAL CONTACT - HIGH PERFORMANCE COPPER ALLOY.
2. FINISHES: SELECTIVE GOLD (Au) ON CONTACT AREA. SELECTIVE MATTE TIN (Sn) ON PCB TAILS. NICKEL (Ni) OVERALL.
3. THIS PART CONFORMS TO MOLEX PRODUCT SPECIFICATION PS-75221-999.
4. FOR MIXED CONTACT MATING LENGTHS CONSULT MOLEX FOR AVAILABILITY.
5. 10 COLUMN 4 PAIR L-SERIES SHOWN FOR ILLUSTRATION PURPOSES ONLY. FOR SPECIFIC PART NUMBER AND MATING INFORMATION PLEASE REFER TO CHART.
6. PACKAGE PER PK-70873-563.
7. MARK PART NUMBER AND DATE CODE APPROXIMATELY WHERE SHOWN.
8. OPTIONAL HOLE LOCATION FOR GROUNDED GUIDE PIN OR ADDITIONAL GUIDE PIN SUPPORT. FOR GROUNDED GUIDE PIN, HOLE TO BE PLATED, DRILL SIZE Ø2.58, PAD SIZE Ø5.50
9. THESE PARTS CONFORM TO MOLEX COSMETIC SPECIFICATION PS-45499-002 CLASS B.
10. MAPS (MOLEX ADVANCED PLATING SYSTEM).

75465-2***

COLUMN
21=10 COL
22=25 COL
25= 5 COL

KEYING POSITION
NONE = 0
1 = A
2 = B
ETC..

PIN LENGTH DIM "M"	GOLD (Au) THICKNESS micrometers
0=3.55 mm	0.25 (MAPS)
1=4.55 mm	
2=5.55 mm	
3=3.55 mm	0.76
4=4.55 mm	
5=5.55 mm	
7=3.55 mm	1.27
8=4.55 mm	
9=5.55 mm	

PART NUMBER TABLE				
ASSY PART NO.	K	L	P	TOTAL NO. OF CONTACTS
75465-21**	9	16.65	24.78	110
75465-22**	24	44.40	52.53	275
75465-25**	4	7.40	15.53	55

LEAD-FREE PLATING

REV	DESCRIPTION
C	REV TO LEAD-FREE EC NO: UCP2013-0690 2012/09/06 DRWN:GES 2012/09/07 CHK:DMWOLFE 2012/12/05 APPR:SMILLER

QUALITY SYMBOLS: ▽=0, ▽=0, ▽=0

GENERAL TOLERANCES (UNLESS SPECIFIED)

	mm	INCH
4 PLACES	± ---	± ---
3 PLACES	± ---	± ---
2 PLACES	± 0.25	± ---
1 PLACE	± 0.38	± ---
0 PLACE	±	±
ANGULAR ±1/2°		

DRAFT WHERE APPLICABLE MUST REMAIN WITHIN DIMENSIONS

DIMENSION STYLE: MM ONLY	SCALE: 5:1	DESIGN UNITS: METRIC
THIRD ANGLE PROJECTION		
DRAWN BY: NMARTIN	DATE: 2004/12/17	
CHECKED BY: SREED	DATE: 2004/12/17	
APPROVED BY: CBIXLER	DATE: 2004/12/17	
MATERIAL NO.: SEE CHART		
SIZE: D		

TITLE: GBX 4-PAIR L-SERIES LF LEFT END BACKPLANE SALES ASSEMBLY DRAWING

molex

DOCUMENT NO.: SD-75465-210

SHEET NO.: 1 OF 1

THIS DRAWING CONTAINS INFORMATION THAT IS PROPRIETARY TO MOLEX INCORPORATED AND SHOULD NOT BE USED WITHOUT WRITTEN PERMISSION