Copyright FCI

FCIconnect.com

PRODUCT NUMBER
10097213–T52–XXXLF

PLATING
2.0–6.0μm FULL MATTE TIN
1.27μm NICKEL MINIMUM UNDERPLATING

LEAD FREE, RoHS COMPATIBLE, NOTE 6
PACKAGING, NOTE 5
POSITIONS PER ROW 02 TO 25

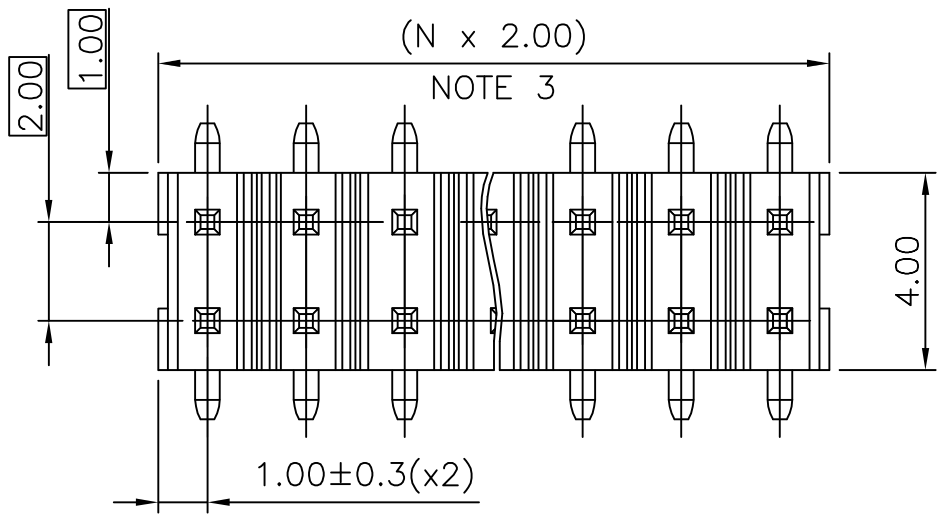

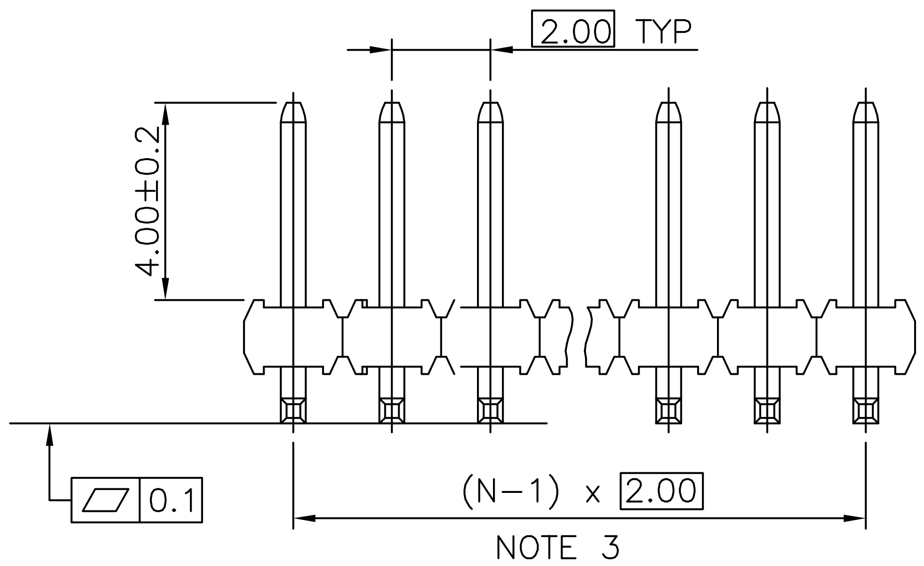

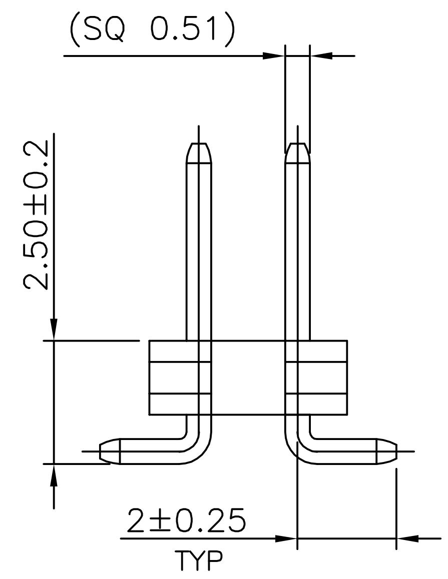

NOTES:

1. MATERIAL HOUSING: HIGH TEMP. THERMOPLASTIC UL 94V–0, COLOR BLACK
2. MATERIAL TERMINAL: COPPER ALLOY
3. TO DETERMINE DIMENSIONS:
   N = NUMBER OF POSITIONS PER ROW.
4. 7N MIN. PIN RETENTION IN EITHER DIRECTION.
5. PACKAGING:
   = PLASTIC BOX.
   A = TAPE AND REEL WITH PICK UP CAP SEE TA 884 FOR PRODUCT AVAILABILITY.
   U = TUBE WITHOUT CAP FROM 08POS UP TO 50POS
6. RoHS COMPATIBLE PRODUCT SPECIFICATIONS
   a – PLATING:
   – "LF" MEANS THE PRODUCT IS LEAD–FREE, 2μm MINIMUM MATTE TIN OVER 1.27μm MINIMUM NICKEL UNDERPLATE.
   b – MANUFACTURING PROCESS COMPATIBILITY
   – THE HOUSING WILL WITHSTAND EXPOSURE TO 260°C PEAK TEMPERATURE FOR 30 SECONDES IN A CONVECTION, INFRA–RED OR VAPOR PHASE REFLOW OVEN.
   c – LABELLING:
   – MEETS PACKAGING SPECS AS PER GS–14–920
   d – LEGAL STATEMENT : SEE GS–47–0004

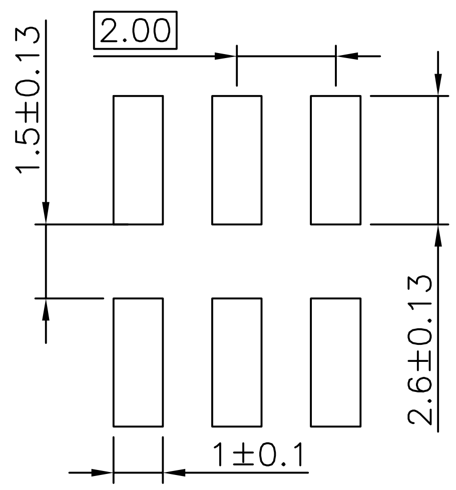

RECOMMENDED PAD LAYOUT

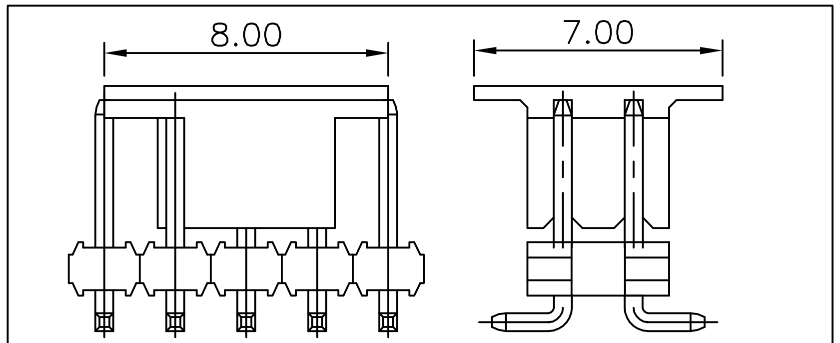

CAP DIMS FOR 2x3 POS UP TO 2x25 POS

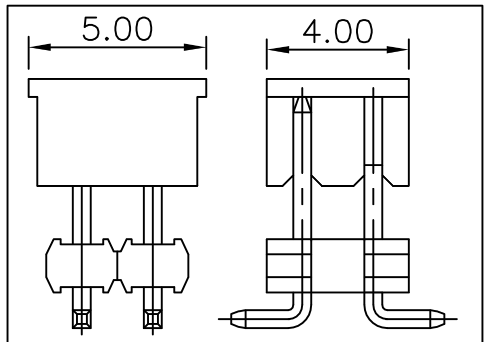

CAP DIMS FOR 2x2 POS

ltr	ecn no	dr	date
A	F10–0029	LMU	10.04.09
B	B–19188	LMU	14.10.24

mat'l. code

surface ISO 1302 √ | tolerance ISO 406 ISO 1101 | projection

tolerances unless otherwise specified: angles; linear .X ±0.3, .XX ±0.13, .XXX ±0.05

mm, scale 1:1

dr	L.MULIN	09.02.05
engr	J.COMPAGNON	09.02.05
chr	JCO	10.04.09
appd	JCO	10.04.09

product family: MINITEK

title: UNSH HEADER 2.00 mm SMT FULL TIN

dwg no: 10097213 — sheet 1 of 1 — size A3

type: CUSTOMER Drawing

sheet index | revision sheet

form: A3

PDS: Rev :B STATUS:Released Printed: May 25, 2022