NOTES:

1. MATERIALS AND FINISHES
   BODY – BERYLLIUM COPPER, GOLD PLATING
   CONTACT – BERYLLIUM COPPER, GOLD PLATING
   INSULATOR – PTFE
2. ELECTRICAL:
   A. IMPEDANCE: 50 OHM
   B. FREQUENCY RANGE: DC –26.5 GHZ
   C. VAWR(RETURN LOSS): 1.2(20.8 dB) MAX. DC–10 GHZ
   1.4(15.6 dB) MAX. 10–18 GHZ
   1.5(14 dB) MAX. 18–26.5 GHZ
   D. DIELECTRIC WITHSTANDING VOLTAGE: 500 VRMS, MIN.
3. MECHANICAL:
   A. DURABILITY: 100 CYCLES MIN.
   B. ENGAGEMENT FORCE: 15 LBS.(67 N) MAX.
   C. DISENGAGEMENT FORCE: 2 LBS.(9 N) MIN.
   D. TEMPERATURE RANGE: – 65°C to +165°C
4. PACKAGE:
   A. QUANTITY: SINGLE PACK
   B. MARKING: AMPHENOL, SMP–FR–C06, DATE CODE
5. SEE AMPHENOL SPEC 349–50687 FOR CABLE ASSEMBLY INSTRUCTIONS.

THIRD ANGLE PROJ.

REVISIONS

REV	DESCRIPTION	DATE	ECO	APPR
A	RELEASE TO MFG.	14–Mar–05	––	CW
B	REDRAWN TO UPDATE FORMAT/RD–DM09021901S1	23–Mar–09	47467	SH

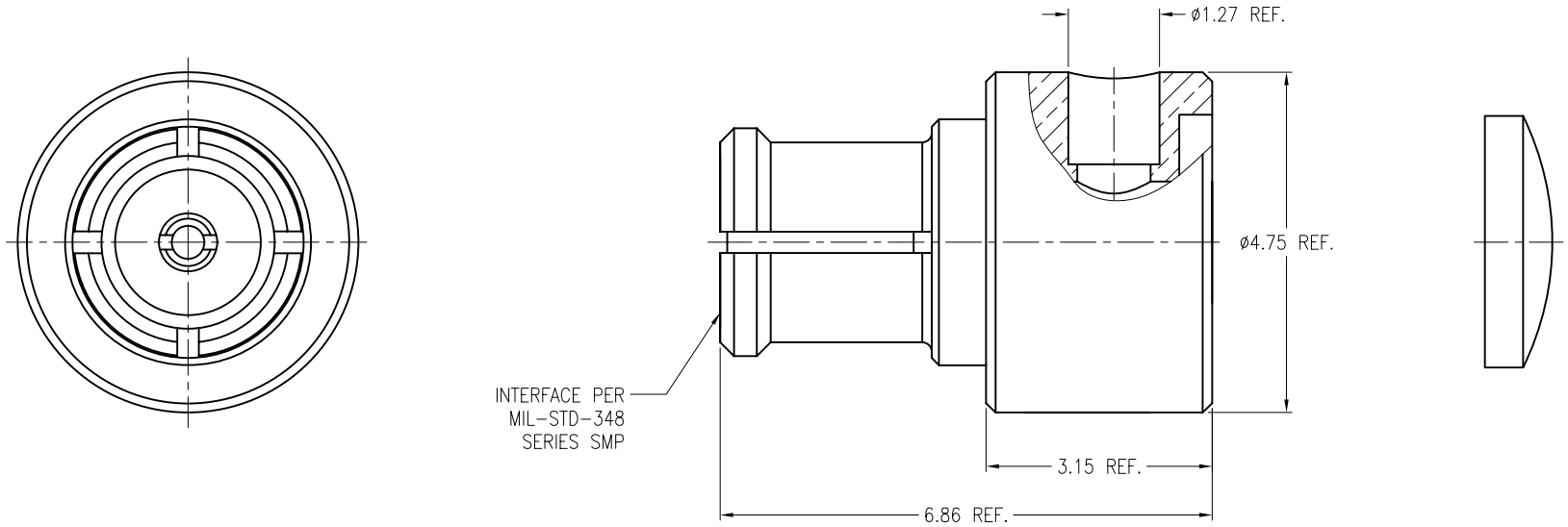

CUSTOMER OUTLINE DRAWING

ALL OTHER SHEETS ARE FOR INTERNAL USE ONLY

UNLESS OTHERWISE SPECIFIED, DIMENSIONS ARE IN METRIC AND TOLERANCES ARE:

0.5 – 6mm	6 – 30mm	30 – 120mm	ANGLES
±0.1mm	±0.2mm	± 0.3mm	±1°

NOTICE – These drawings, specifications, or other data (1) are, and remain the property of Amphenol Corp. (2) must be returned upon request; and (3) are confidential and not to be disclosed to any person other than those to whom they are given by Amphenol Corp. The furnishing of these drawings, specifications, or other data by Amphenol Corp., or to any other person to anyone for any purpose is not to be regarded by implication or otherwise in any manner licensing, granting rights or permitting such holder or any other person to manufacture, use or sell any product, process or design, patented or otherwise, that may in any way be related to or disclosed by said drawings, specifications, or other data.

MATERIAL

REFERENCE
GEN#ASSYF3_SMP
EAR#322 & 1693
615X–1716

FINISH

DRAWN S.XIE	DATE 14–Mar–05	
ENGINEER COASE.W	DATE 14–Mar–05	
APPROVED COASE.W	DATE 14–Mar–05	
CAD FILE F:\DWG\CNPD\SMP\FR\C06–BSZ		

TITLE
SMP RIGHT ANGLE PLUG
FOR .047 S.R. CABLE

SCALE: 10/1	SHEET 2 OF 2	
DWG SIZE B	CODE ID 74868	REV B

Amphenol RF
Danbury CT USA, Tainan Taiwan, Shenzhen China
www.amphenolrf.com

DRAWING NO. SMP–FR–C06
ITEM NO. SMP–FR–C06
PART NO. SMP–FR–C06