DRAWING PART NUMBERS ARE PROPRIETARY
THIS DRAWING IS PROPRIETARY.
BY ACCEPTANCE OR PURCHASE ORDER
© COPYRIGHT TYCO ELECTRONICS CORPORATION, ALL INTERNATIONAL RIGHTS RESERVED.

REVISIONS			
ZONE	REV	DESCRIPTION	DATE	APP
	P	REV PER ECR-00V-031		

1. HOUSING: 2 ASS TI LCP, DO VECTRA, COLOR: BLACK.
2. CONTACT: PHOSPHOR BRONZE
3. NICKEL UNDERPLATE: 0.00127 [.0000500] MIN - ALL OVER.
4. TIN-LEAD PLATE: 0.00254 [.0000100] MIN - SOLDER POSTS.
5. GOLD FLASH: 0.00076 [.0000300] MIN - CONTACT AREA.
6. NICKEL PLATE PER MIL-G-45204 GOLD PLATE PER QQ-N-290.
7. ANY PART NUMBER AND DATE CODE ARE MARKED IN APPROXIMATE AREA SHOWN, EITHER SIDE.
8. RECOMMENDED PCB HOLE SIZE DIA: 1.02±0.08 [.040±.003].

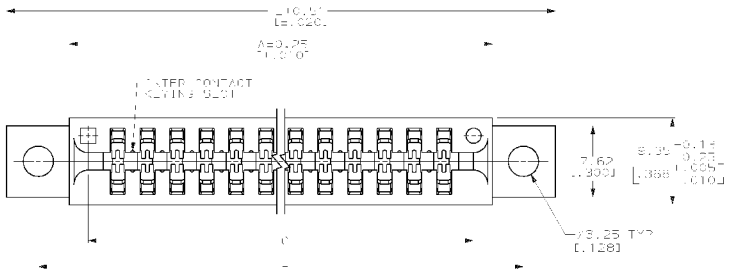

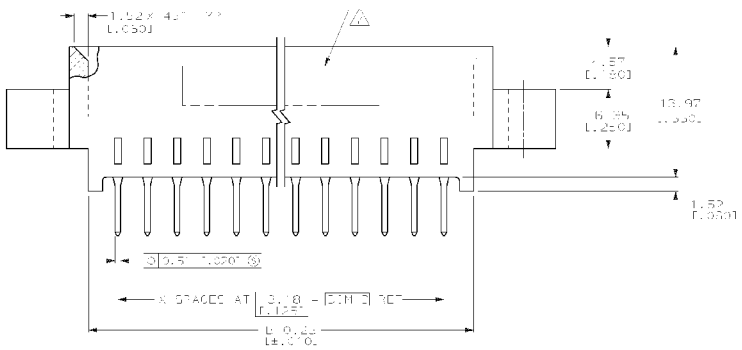

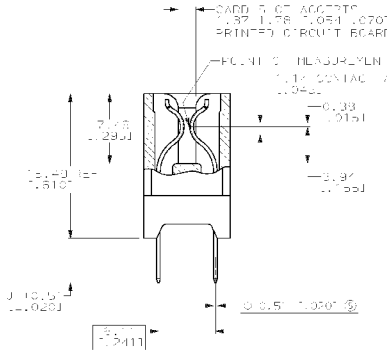

UNLESS SPECIFIED DIMENSIONS IN mm [DIM CS] TOLERANCES ARE	DR 12/4/01	Tyco Electronics Harrisburg, PA 17105-3608
MATERIAL HOUSING: CONTACT:	CHK 5-10-02	NAME CONNECTOR ASSEMBLY, STANDARD LOGIC 1., 3.18 [.125] CL
FINISH	APPD 5-10-02	
	ZONE 2-13-02	
	PRODUCT REF.	
	APPLICATION SPEC	SIZE CAGE CODE DRAWING NO. D 00479
	NEXT	SHEET 1 OF 2

METRIC

CUSTOMER DRAWING

DRAWING DATA IN THIS AREA IS PROPRIETARY
THIS DRAWING IS UNPUBLISHED. BY PACTE FOR PUBLICATION
© COPYRIGHT TYCO ELECTRONICS CORPORATION. ALL INTERNATIONAL RIGHTS RESERVED.

REVISIONS			
REV		DESCRIPTION	DATE
P		[illegible]	

OBSOLETE									44	5-531341-3
OBSOLETE									11	5-531341-4
OBSOLETE									33	5 531341 3
OBSOLETE									33	5 531341 2
OBSOLETE									33	5-531341-1
OBSOLETE									33	5 531341 0
OBSOLETE									33	7 531341 9
OBSOLETE	1.75 [44.45]	103.09 [2.596]	115.35 [4.541]	82.08 [3.231]	95.25 [3.750]	96.42 [3.796]	102.16 [4.022]	48	33	4-531341-8
OBSOLETE									43	4-531341-7
OBSOLETE									43	7 531341 6
OBSOLETE									33	7 531341 5
OBSOLETE									33	4-531341-4
OBSOLETE	1.75 [44.45]	103.09 [2.596]	115.35 [4.541]	82.08 [3.231]	95.25 [3.750]	96.42 [3.796]	102.16 [4.022]	48	33	4-531341-3
OBSOLETE									33	7 531341 2
OBSOLETE									33	4 531341 1
	1	-	-	D	C	B	A	X	NO. O PCES	PART NUMBER

OBSOLETE								-	33	4-531341-0
OBSOLETE									73	3 531341 9
OBSOLETE									73	3 531341 8
OBSOLETE								-	6	3-531341-7
OBSOLETE								-	33	3-531341-6
OBSOLETE									73	3 531341 5
OBSOLETE									73	3 531341 4
OBSOLETE								-	33	3-531341-3
OBSOLETE								-	33	3-531341-2
OBSOLETE									33	3 531341 1
OBSOLETE	.4 [10.16] 1.187	152.74 [6.015]	109.22 [4.300]	8[illegible].22 [3.375]	92.08 [3.626]	92.38 [3.635]	99.14 [3.765]	27	33	3-531341-0
OBSOLETE								-	33	2-531341-9
OBSOLETE									73	2 531341 8
OBSOLETE									73	2 531341 7
OBSOLETE								-	3	2-531341-6
OBSOLETE								-	6	2-531341-5
OBSOLETE	3.19 [81.03]	132.95 [5.233]	102.29 [4.027]	110.95 [4.368]	[illegible].32 [5.34]	15[illegible].32 [6.13]	86.59 [3.409]	29	33	2 531341 4
OBSOLETE									23	2 531341 3
OBSOLETE								-	23	2-531341-2
OBSOLETE									23	2 531341 1
OBSOLETE									33	2 531341 0
OBSOLETE								-	33	1-531341-9
OBSOLETE								-	23	1-531341-8
OBSOLETE									23	1 531341 7
OBSOLETE									13	1 531341 6
OBSOLETE								-	3	1-531341-5
OBSOLETE								-	3	1-531341-4
OBSOLETE	2.19 [55.63]	32.89 [1.295]	98.50 [3.878]	15.88 [.625]	22.22 [.875]	22.22 [.875]	28.29 [1.114]	5	6	1 531341 3
OBSOLETE									53	1 531341 2
OBSOLETE								-	23	1-531341-1
OBSOLETE									23	1 531341 0
OBSOLETE									33	1 531341 9
OBSOLETE								-	33	1-531341-8
OBSOLETE	3.19 [81.03]	103.86 [4.088]	115.65 [4.553]	95.02 [3.741]	96.42 [3.796]	98.42 [3.875]	102.16 [4.022]	28	33	1-531341-7
OBSOLETE									23	1 531341 6
OBSOLETE									23	1 531341 5
OBSOLETE								-	3	1-531341-4
OBSOLETE								-	3	1-531341-3
OBSOLETE									13	1 531341 2
OBSOLETE									6	1 531341 1
	1	-	-	D	C	B	A	X	NO. O PCES	PART NUMBER

UNLESS OTHERWISE NOTED, UNLESS SPECIFIED
DIMENSIONS IN mm [INC CS]
TOLERANCES
DECIMALS
ANGLES
MATERIAL
HOUSING:
CONTACT:
FINISH
CONTACT:

DR
DATE 03-10-99
CHK
APVD
ZONE
PRODUCT REF.
APPLICATION SPEC
NOTE

Tyco Electronics
Harrisburg, PA 17105-3608

NAME
CONNECTOR ASSEMBLY, STANDARD LOGIC 1, 3.18 [.125] CL

SIZE D
CAGE CODE 00779
DRAWING NO. 531341
SCALE 5:1
SHEET 2 OF 2

METRIC

CUSTOMER DRAWING