REVISIONS					
REV	ECO	DESCRIPTION	DATE	BY	APPR
A1	-	RELEASE NEW DWG FORMAT	12/JUN/15	ORION	-
A2	-	CORRECT SECTION DIMESNIONS	29/MAR/17	ORION	TOMMY
A3	C1070S	UPDATE DRAWING	28/JUN/19	JOE	TOMMY
A4	C1298S	UPDATE PLATING	14/SEP/20	SULLEN	TOMMY

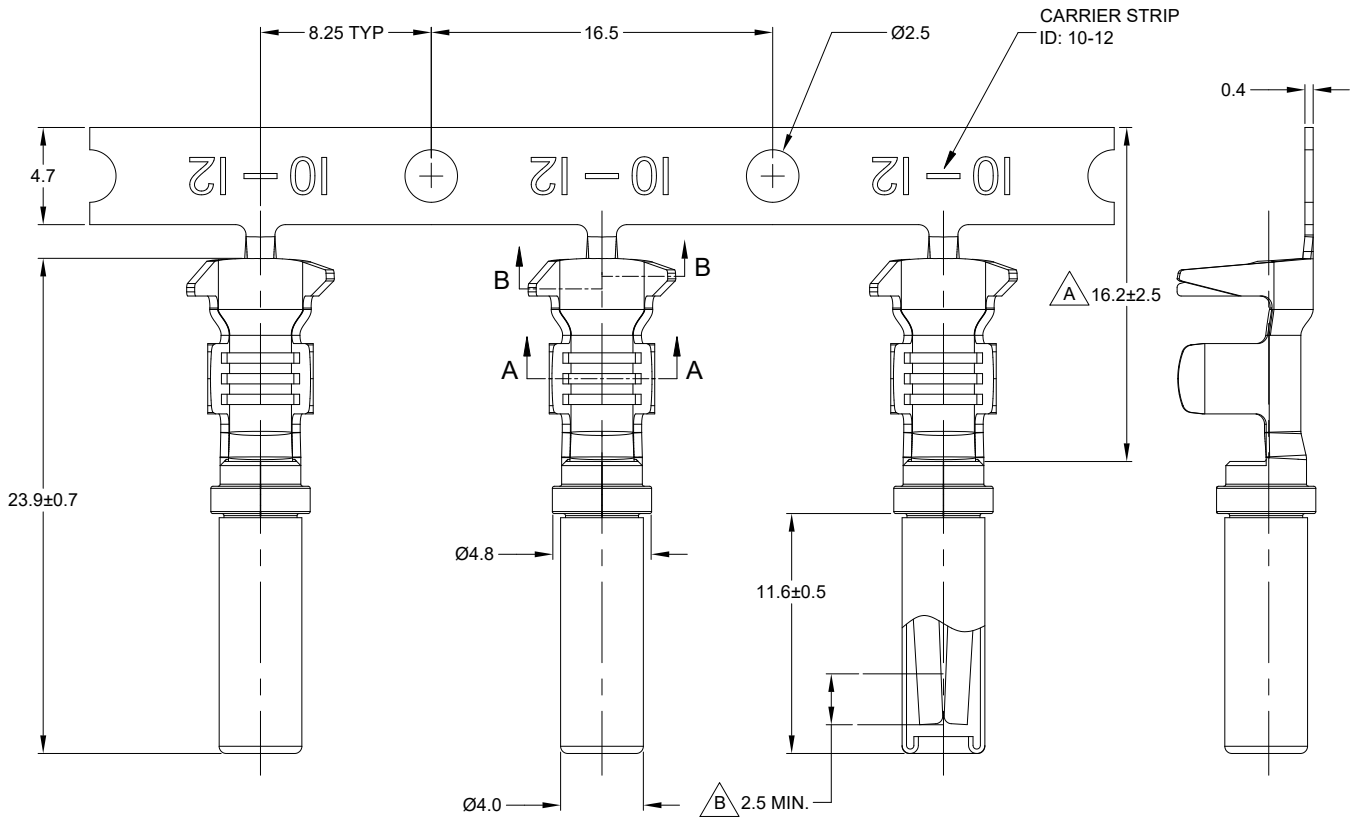

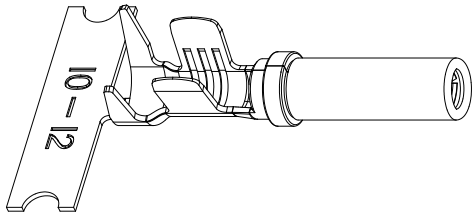

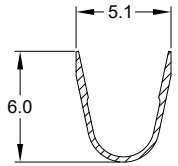

SECTION A-A

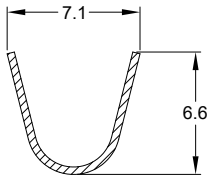

SECTION B-B

NOTES: UNLESS OTHERWISE SPECIFIED

1. MATERIAL: COPPER ALLOY

2. PLATING: SEE PART NUMBER CHART

3. CONTACT SIZE: 12

4. SPECIFICATIONS:
   4.1 CURRENT RATING: 25 AMPS
   4.2 CONTACT MILLIVOLT DROP: 100 MILLIVOLT DROP @ 25 AMP TEST CURRENT.
   4.3 RoHS COMPLIANT

5. RECOMMENDED WIRE RANGE: 10 - 12 AWG (6.0 - 4.0MM²)
   RECOMMENDED INSUL O.D: 3.56 - 5.18MM (0.140 - 0.204INCH)

6. PACKAGE: 2000 PCS/REEL

7. ALL DIMENSIONS ARE FOR REFERENCE USE ONLY

PART NUMBER CHART		
PLATING	PART NUMBER	PLATING DESCRIPTION
NICKEL	AT62-12-0222	SELECTIVE TIN OVER NICKEL OVERALL IN A ZONE
GOLD	AT62-12-0244	SELECTIVE GOLD FLASH OVER NICKEL OVERALL IN B ZONE OR ENTIRE CONTACT
TIN	AT62-12-0277	TIN OVER NICKEL OVERALL

	SEE PART NUMBER CHART	REF: 1062-12-0222, 1062-12-0244	
	PART NUMBER	DESCRIPTION	ITEM
QUANTITY	MATERIALS LIST		

UNLESS OTHERWISE SPECIFIED
1) All dimensions are in metric(mm).
2) Tolerances are as follows:
1 PL DEC ±0.30
2 PL DEC ±0.15
3 PL DEC ±0.08
Fractions ±1/64
Angles ±1°
3) Note reference = X

MATERIAL SPECIFICATIONS:

PROCESS SPECIFICATIONS:

NEXT ASS'Y:

SIGNATURES		DATE
DRAWN:	SULLEN.ZHANG	14/SEP/20
CHECKED:	ORION.LI	15/SEP/20
ENGINEER:		
APPROVAL:	TOMMY.XIE	16/SEP/20
CUSTOMER:		

THIS DRAWING IS SUPPLIED FOR INFORMATION ONLY. DESIGN FEATURES, SPECIFICATIONS AND PERFORMANCE DATA SHOWN HEREON ARE THE PROPERTY OF THE AMPHENOL CORPORATION. NO RIGHTS OF REPRODUCTION ARE IMPLIED. ALL DIMENSIONS ARE SUBJECT TO NORMAL MANUFACTURING VARIATIONS.

Amphenol
Sine Systems - www.amphenol-sine.com
44724 Morley Drive
Clinton Township, MI 48036

CONTACT, SOCKET, STAMPED, SIZE 12, 10-12 AWG, A SERIES

SIZE	TYPE	DWG NO:	REVISION
B	C-	AT62-12-02XX	A4

SCALE: NONE SHEET 1 OF 1

TITLE: CONTACT, STAMPED, SIZE 12, 10-12 AWG, A SERIES
DWG NO: AT62-12-02XX
REV: A4
SH: 1
OF: 1