used for: FULL METAL π-FILTER

POS.	PART NO. SOCKET CONNECTOR / PLUG CONNECTOR 4-40 UNC			
	2 x 180pF±20%	2 x 370pF±20%	2 x 830pF±20%	2 x 1300pF±20%
9	MAP1XAAAR02R361X	MAP1XAAAR02R741X	MAP1XAAAR02R162X	MAP1XAAAR02R262X
15	MAP2XAAAR02R361X	MAP2XAAAR02R741X	MAP2XAAAR02R162X	MAP2XAAAR02R262X
25	MAP3XAAAR02R361X	MAP3XAAAR02R741X	MAP3XAAAR02R162X	MAP3XAAAR02R262X
37	MAP4XAAAR02R361X	MAP4XAAAR02R741X	MAP4XAAAR02R162X	MAP4XAAAR02R262X

POS.	A $_{-0.76}$	B1 $_{-0.25}$	B2 $^{+0.25}$	C	D $_{-0.3}$
9	31.19	16.46	16.79	$25.00^{+0.12}_{-0.13}$	6.12
15	39.52	24.79	25.12	$33.30^{+0.15}_{-0.1}$	6.12
25	53.42	38.50	38.84	$47.04_{\pm 0.13}$	5.99
37	69.70	54.96	55.30	$63.50_{\pm 0.13}$	5.99

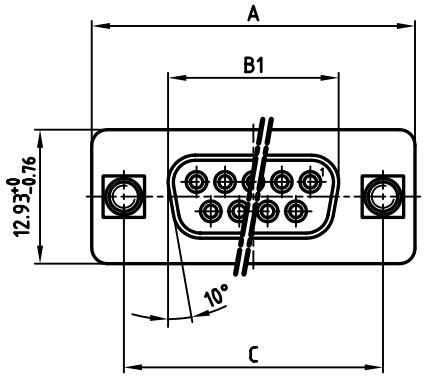

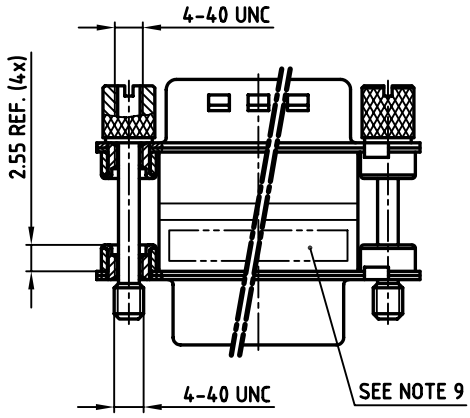

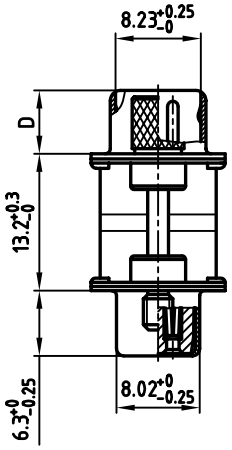

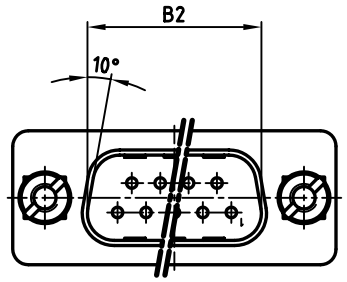

NOTES:

1. METALSHELLS: STEEL; min. 320µ" TIN
2. INSULATORS: PBT GF UL 94 V-0, BLACK
3. CONTACTS: COPPER ALLOY
   PLATING: 8µ" HARD GOLD OVER min. 50µ" NICKEL
4. THREADED INSERT: COPPER ALLOY; min. 200µ" TIN over 80µ" NICKEL
5. COLLAR: COPPER ALLOY; min. 200µ" TIN over 80µ" NICKEL
6. CAPACITANCE: SEE TABLE
7. DIELECTRIC WITHSTANDING VOLTAGE: 300 VDC
8. MAXIMUM TORQUE VALUE FOR THREAD: 6" LBS
9. CONNECTOR IS PART MARKED: PART-NO. CONEC ABC

Directive 2002/95/EC „RoHS" Compliant

APPROVAL # FREIGABE # DEBLOCAGE # AUTOR/ZACION # APPROVAL

CUSTOMER APPROVAL DATE:

NAME: TITLE:

COMPANY NAME:

THIS DRAWING MAY NOT BE COPIED OR REPRODUCED IN ANY WAY, AND MAY NOT BE PASSED ON TO A THIRD PARTY WITHOUT WRITTEN PERMISSION. OWNERSHIP AND COPYRIGHT OF CONEC GmbH

DO NOT ALTER CAD DRAWING BY HAND

rev.	description	date	name

tolerance

2003	date	name
drawn	24.01.	Parei
appd.	24.01.	Kühle
norm		
d-old		

CONEC®

scale: 2:1
material: SEE NOTES

title:
FULL METAL π-FILTER ADAPTER
PLUG / SOCKET 9-37pos.
with jack screws - 4-40 UNC

dwg no: 24K1A357
AutoCAD 2000
DIN-A 3
sh: 1/1

part no: SEE TABLE