DRAWING MADE IN AMERICAN PROJECTION

NUMBER C-165305-E

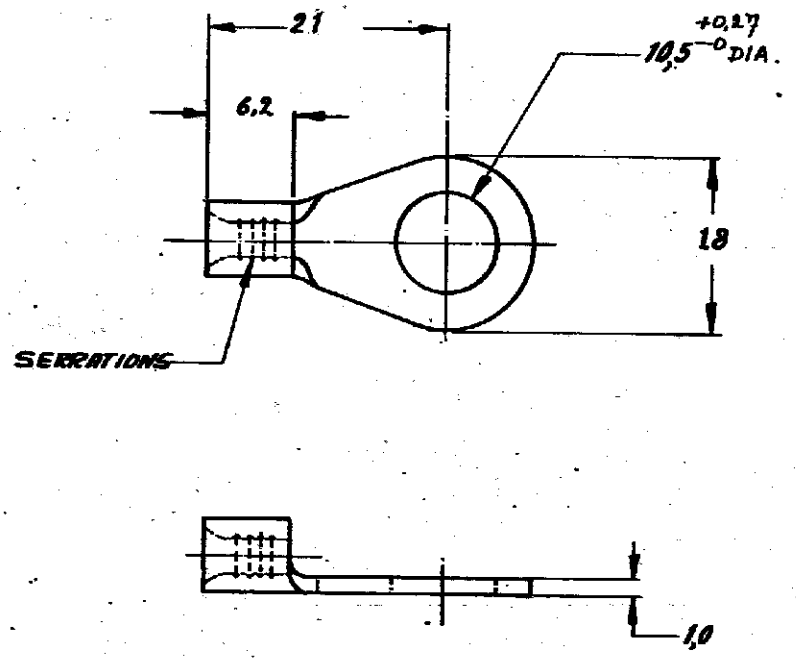

CUSTOMER COPY FOR REFERENCE ONLY

©1967 BY AMP-HOLLAND N.V. ALL RIGHTS RESERVED A-MP PRODUCTS COVERED BY PATENTS AND/OR PATENTS PENDING.

AMP-HOLLAND N.V.
'S-HERTOGENBOSCH
HOLLAND

ORDER NO.	MATERIAL	PLATING
165305	COPPER	TIN PLATED

WIRE-RANGE	INSUL.-RANGE	TYPE
4-6 mm²	—//—	DIN-SOLISTRAND

SCALE	LOC	SIZE	NO	REV
—//—	H	A	C-165305-E	C

DR	DATE	DR	DATE
R. BHONDT.	23/6-67	L.C.Y. Geen	25/10/67
CHK	DATE	APP	DATE
			15/12-67

NAME RINGTONGUE stud: M 10

DIMENSIONS IN M.M. DO NOT SCALE PRINT

AMP 1282