THIS DRAWING IS UNPUBLISHED. RELEASED FOR PUBLICATION -, .
© COPYRIGHT By - ALL RIGHTS RESERVED.

REVISIONS					
P	LTR	DESCRIPTION	DATE	DWN	APVD
	AC3	REVISED PER ECR-18-007590	21JUN2018	BDA	SG

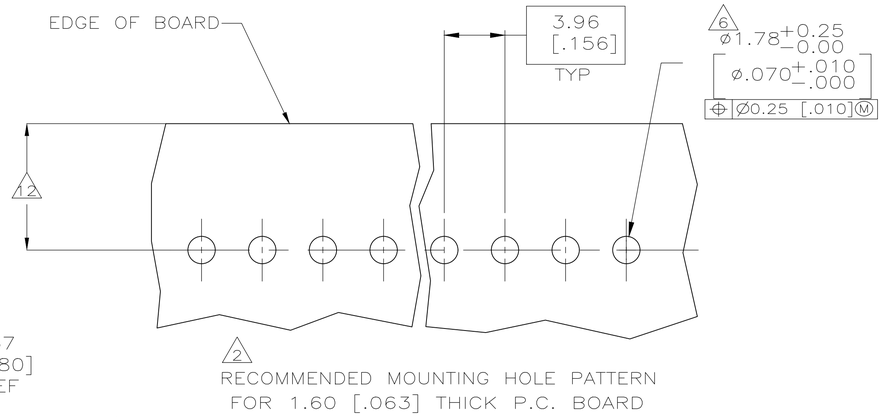

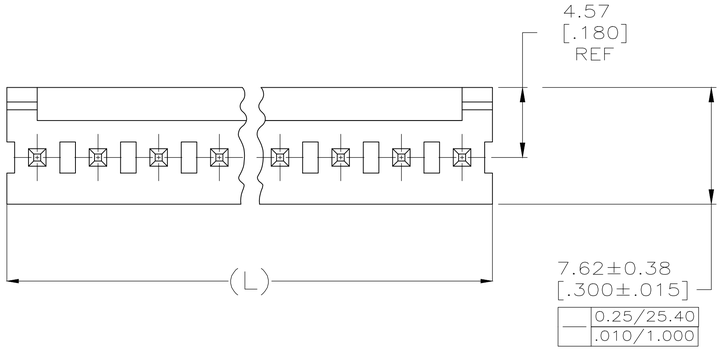

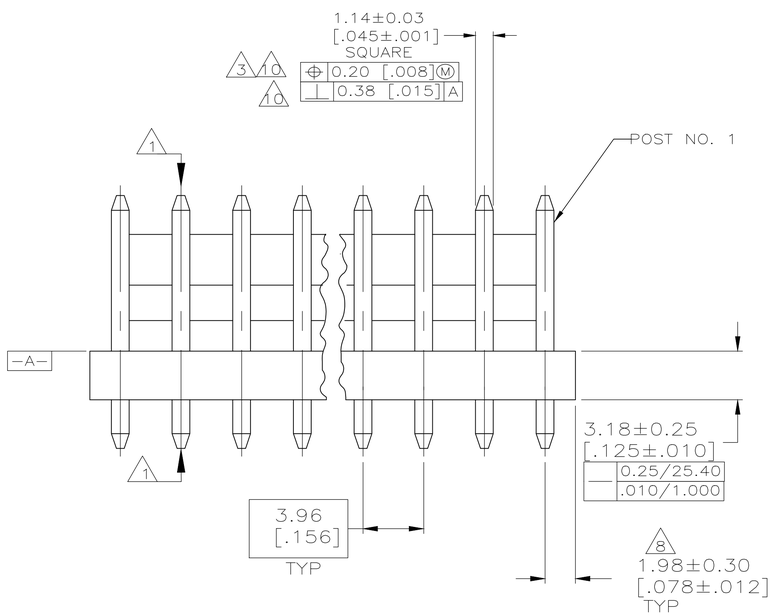

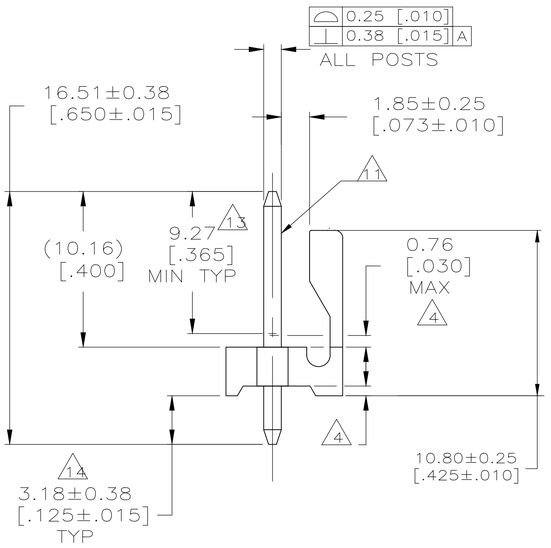

1. POST TO WITHSTAND 13 NEWTONS (3 LBS) MINIMUM AXIAL FORCE IN BOTH DIRECTIONS SHOWN WITHOUT DISLODGING.
2. TOLERANCES APPLY TO SOLDER SIDE OF BOARD.
3. MEASURED AT SURFACE −A−
4. PLASTIC FLASH PERMITTED IN THIS AREA.
5. PARTS COMPLY WITH AMP SOLDERABILITY SPEC. NO. 109−11−2.
6. ONE HOLE MAY BE UNDERSIZED 1.65/1.52 [.065/.060] DIA. FOR ASSEMBLY RETENTION DURING WAVE SOLDERING.
7. MATERIAL: HEADER−THERMOPLASTIC POLYESTER GLASS−FILLED 94V−0 (NATURAL)
   POST−COPPER ALLOY (SEE NOTES 13 & 14 FOR PLATING)
8. COORDINATE DIMENSION APPLIES FROM CENTER OF ACTUAL FEATURE.
9. PLASTIC BURRS CAUSED BY CUT−OFF TOOLING ARE PERMITTED WITHIN THE MAXIMUM TOLERANCE ENVELOPE.
10. POST TO BE MEASURED WHEN STRIP IS HELD FLAT.
11. POST MUST WITHSTAND TWO 90° BENDS AGAINST EXTRUSION WITHOUT BREAKING.
12. DIMENSION SHOULD BE 4.45 [.175] MIN WHEN MATING WITH A MTA−156 CONNECTOR ASSEMBLY OR A SL−156 CONNECTOR ASSEMBLY.
13. PLATING: GOLD PLATE AREA, 0.00076 [.000030] GOLD OR 0.00008 [.000003] MIN GOLD FLASH OVER 0.00068 [.000027] PALLADIUM NICKEL, PER TE CONNECTIVITY'S DISCRETION, ALL SIDES, OVER NICKEL UNDERPLATE, 0.00127 [.000050] MIN, ALL SIDES AND ENTIRE LENGTH OF POST.
14. PLATING: BRIGHT TIN/LEAD (93/7) PLATE AREA, 0.00381−0.00889 [.000150−.000350] THICK, ALL FOUR SIDES 3.18 [.125] MINIMUM FOR −2 THRU −24. MATTE TIN PLATE AREA 0.00381−0.00889 [.000150−.000350] THICK ALL FOUR SIDES, 3.18 [.125] FOR −32 THRU −54.
15. OBSOLETE PARTS: OBSOLETE CIS STREAMLINING PER D.RENAUD/D.SINISI
16. OBSOLETE PARTS
17. VALUES FOR UL 61800−5−1

Flam	RTIe deg C	HWI	HAI	CTI
VO	120	PLC1	PLC0	PLC3_UL746

LEAD FREE				CONTAINS LEAD			
DIM (L)	NO.OF POSN	ASSEMBLY		DIM (L)	NO.OF POSN	ASSEMBLY	
95.10 [3.744]	24	5−641208−4		95.10 [3.744]	24	~~2−641208−4~~	15
91.14 [3.588]	23	5−641208−3		91.14 [3.588]	23	~~2−641208−3~~	15
87.17 [3.432]	22	5−641208−2		87.17 [3.432]	22	~~2−641208−2~~	15
83.21 [3.276]	21	5−641208−1		83.21 [3.276]	21	~~2−641208−1~~	15
79.25 [3.120]	20	5−641208−0		79.25 [3.120]	20	~~2−641208−0~~	16
75.29 [2.964]	19	4−641208−9		75.29 [2.964]	19	~~1−641208−9~~	15
71.32 [2.808]	18	4−641208−8		71.32 [2.808]	18	~~1−641208−8~~	16
67.36 [2.652]	17	4−641208−7		67.36 [2.652]	17	~~1−641208−7~~	16
63.40 [2.496]	16	4−641208−6		63.40 [2.496]	16	~~1−641208−6~~	16
59.44 [2.340]	15	4−641208−5		59.44 [2.340]	15	~~1−641208−5~~	16
55.47 [2.184]	14	4−641208−4		55.47 [2.184]	14	~~1−641208−4~~	16
51.51 [2.028]	13	4−641208−3		51.51 [2.028]	13	~~1−641208−3~~	16
47.55 [1.872]	12	4−641208−2		47.55 [1.872]	12	~~1−641208−2~~	16
43.59 [1.716]	11	4−641208−1		43.59 [1.716]	11	~~1−641208−1~~	16
39.62 [1.560]	10	4−641208−0		39.62 [1.560]	10	~~1−641208−0~~	16
35.66 [1.404]	9	3−641208−9		35.66 [1.404]	9	~~641208−9~~	16
31.70 [1.248]	8	3−641208−8		31.70 [1.248]	8	~~641208−8~~	16
27.74 [1.092]	7	3−641208−7		27.74 [1.092]	7	~~641208−7~~	16
23.77 [.936]	6	3−641208−6		23.77 [.936]	6	641208−6	
19.81 [.780]	5	3−641208−5		19.81 [.780]	5	~~641208−5~~	16
15.85 [.624]	4	3−641208−4		15.85 [.624]	4	641208−4	
11.89 [.468]	3	3−641208−3		11.89 [.468]	3	~~641208−3~~	16
7.92 [.312]	2	3−641208−2		7.92 [.312]	2	~~641208−2~~	16

THIS DRAWING IS A CONTROLLED DOCUMENT.

DIMENSIONS: mm [INCHES]

TOLERANCES UNLESS OTHERWISE SPECIFIED:
0 PLC ±
1 PLC ±
2 PLC ± 0.13 [.005]
3 PLC ± −
4 PLC ±
ANGLES ±

MATERIAL 7 FINISH 7

DWN S. HOOVER 07−NOV−2002
CHK D. BOSSI 07−NOV−2002
APVD D. BOSSI 07−NOV−2002

PRODUCT SPEC
APPLICATION SPEC
WEIGHT

TE Connectivity Ltd.

NAME: MTA−.156 HDR ASSY,FRCTN LCK, STRAIGHT, .045 SQUARE POST .000030 GOLD

SIZE A1 | CAGE CODE 00779 | DRAWING NO C−641208 | RESTRICTED TO —

CUSTOMER DRAWING | SCALE 5:1 | SHEET 1 OF 1 | REV AC3