THIS DRAWING IS UNPUBLISHED. RELEASED FOR PUBLICATION 2008
© COPYRIGHT 2008 Tyco Electronics AMP GmbH ALL RIGHTS RESERVED.

LOC	DIST
A1	-

REVISIONS

P	LTR	DESCRIPTION	DATE	DWN	APVD
	J3	OPTIONAL to note 8 TTD added. (area A3)	28JUN2011	Kirs	Mair
	J4	SURFACE ERROR (962942-6) CHANGE NOTE 1 TO NOTE 2	06MAR2012	Kirs	Eder
	J5	SET PN´s OBSOLETE	17JUN2014	Ho.	Eder
	J6	ECR-22-153256	21SEP2022	FRAN	SCHI

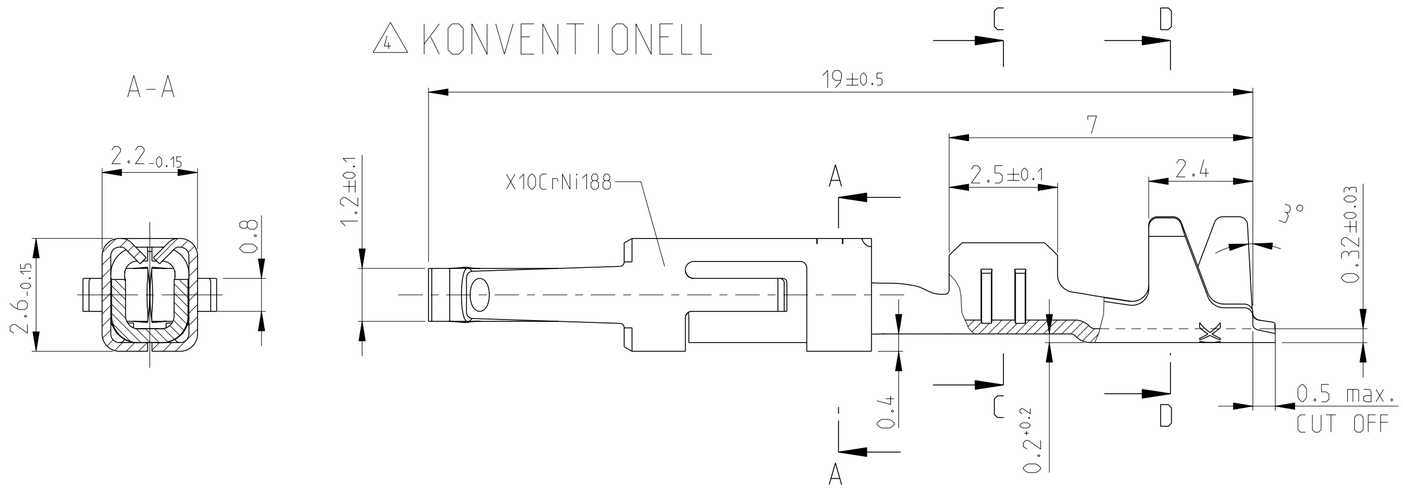

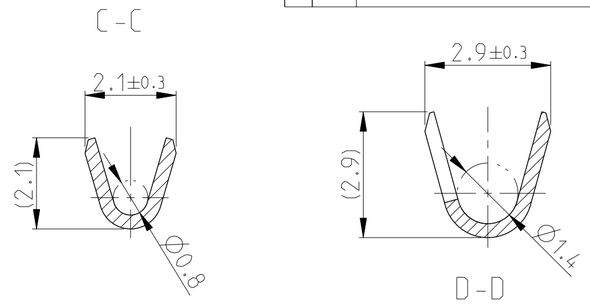

NOTES
Bemerkungen

1 SELECTIVE GOLD OVER NICKEL 0.8 µm MIN.
selektiv vergoldet ueber Nickel 0.8 µm min.

2 TIN PLATED OVER NICKEL 0.2 µm MIN.
verzinnt ueber Nickel 0.2 µm min.

3 WIRE RANGE : 0.2 - 0.5 mm²
INSULATION-Ø : 1.15 - 1.6 mm (FLR)
Drahtgroessenbereich : 0.2 - 0.5 mm²
Isolations-Ø : 1.15 - 1.6 mm (FLR)

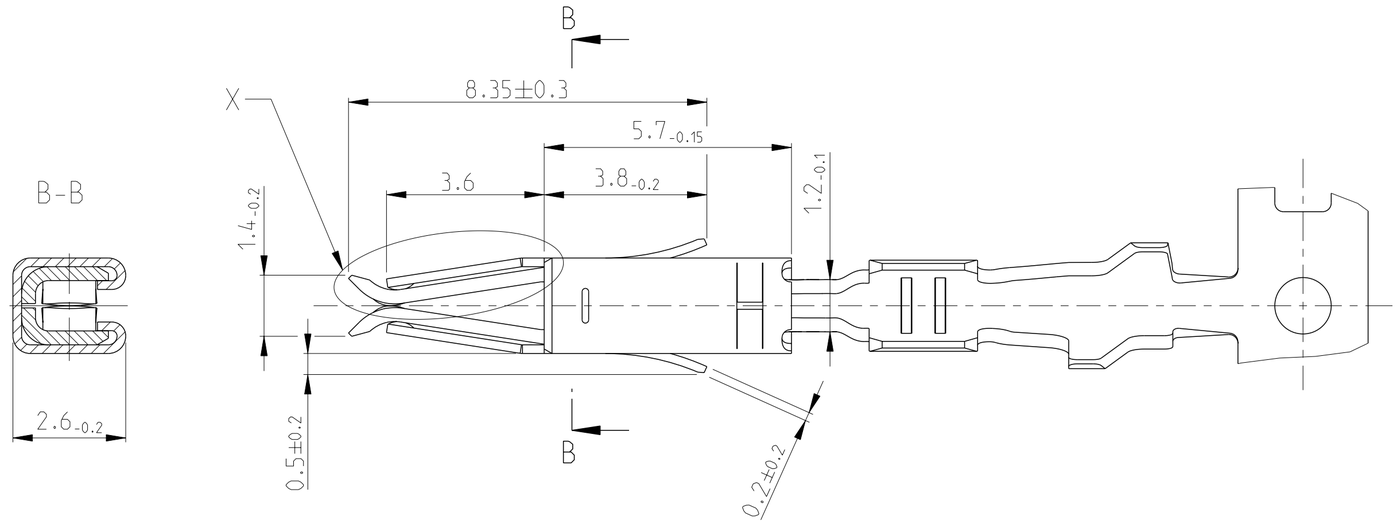

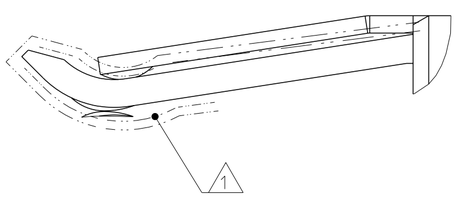

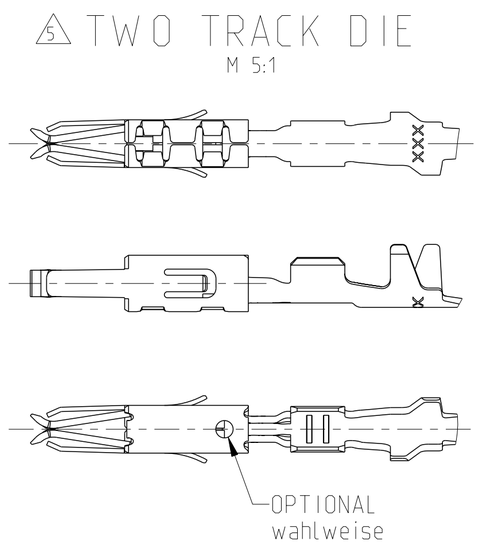

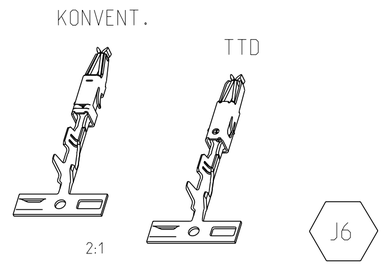

VERSION	LP NO	SURFACE / Oberflaeche	MATERIAL	PART NO	REV
4 5	962944-5	1 2	CuFe2	962942-5	J
4 5	962944-3	1 2	CuSn4	962942-3	J
4 5	962944-2	PRETIN	CuFe2	962942-2	J
4 5	962944-1	PRETIN	CuSn4	962942-1	J

THIS DRAWING IS A CONTROLLED DOCUMENT.

DIMENSIONS: mm

TOLERANCES UNLESS OTHERWISE SPECIFIED: 0 PLC ±, 1 PLC ±, 2 PLC ±0.2, 3 PLC ±, 4 PLC ±, ANGLES ±2°

MATERIAL -

FINISH -

DWN 24JUL2003 M.Pfeilschifter
CHK 24JUL2003 M.Brunner
APVD 24JUL2003 M.Bleicher
PRODUCT SPEC 108-18055
APPLICATION SPEC 114-18081
WEIGHT 0.3 g

TE Connectivity

NAME
MICRO TIMER 2 CONTACT
Micro Timer 2 Kontakt
-

SIZE	CAGE CODE	DRAWING NO	RESTRICTED TO
A2	00779	C-962942	-

CUSTOMER DRAWING | SCALE 10:1 | SHEET 1 OF 1 | REV J6

printed on 21 Sep 2022 11:42 (Mitteleuropäische Zeit) from TE220462