THIS DRAWING IS UNPUBLISHED. RELEASED FOR PUBLICATION - , N/A .
© COPYRIGHT N/A By - ALL RIGHTS RESERVED.

LOC	DIST
—	—

REVISIONS

P	LTR	DESCRIPTION	DATE	DWN	APVD
	S2	REVISED PER ECO-12-009804	22JUN12	PY	DM

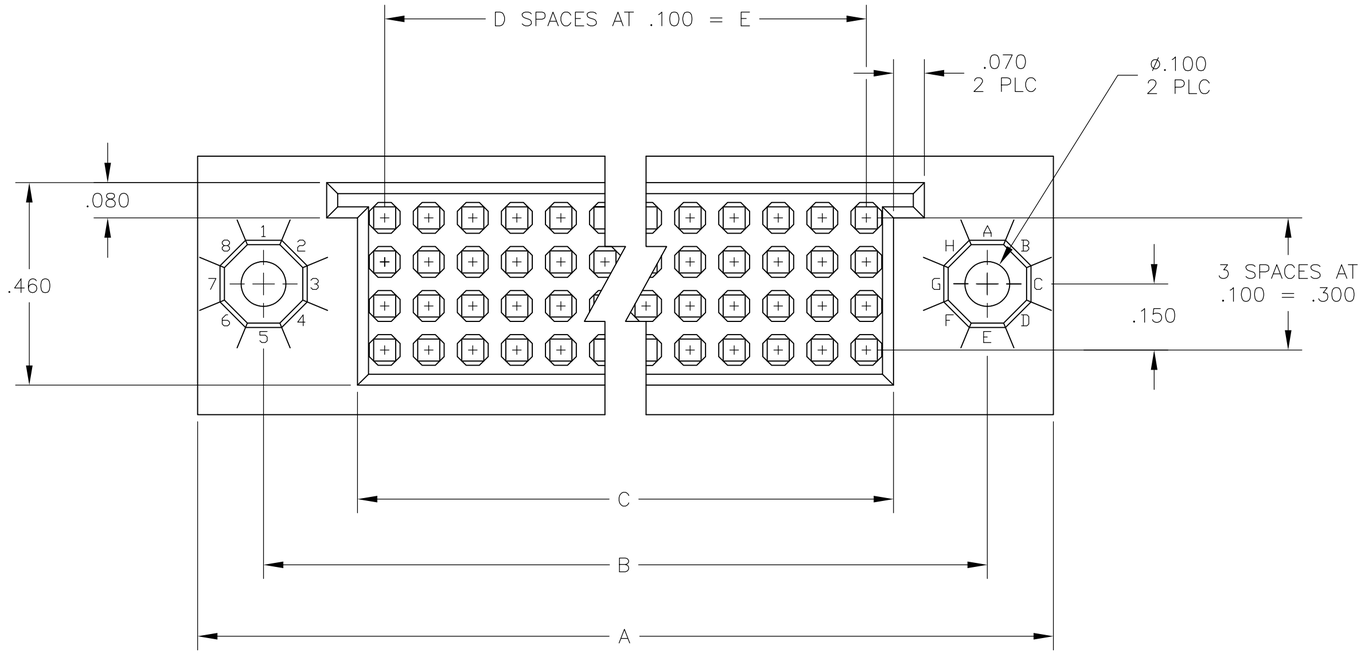

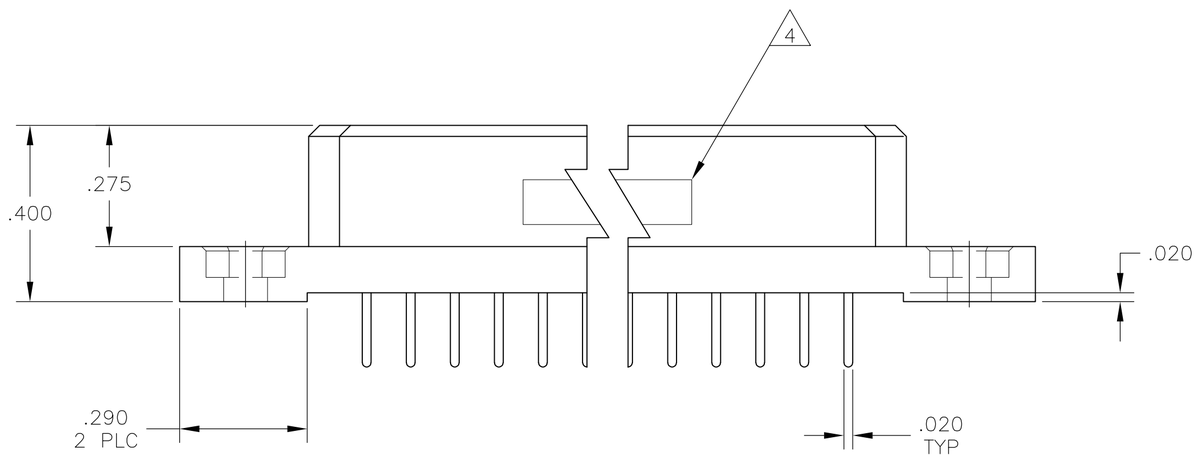

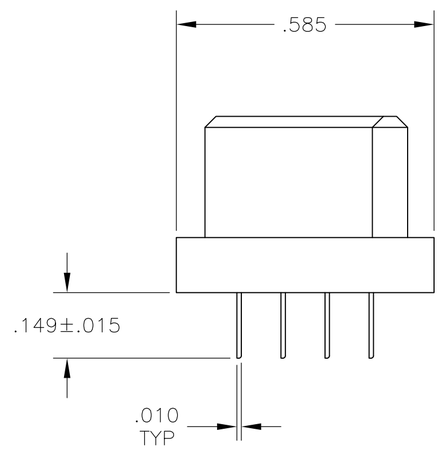

533285

THIS DRAWING IS A CONTROLLED DOCUMENT.		DWN R. SEIFRIED 29-OCT-84	TE Connectivity
DIMENSIONS: INCHES	TOLERANCES UNLESS OTHERWISE SPECIFIED: 0 PLC ± - ; 1 PLC ± - ; 2 PLC ± - ; 3 PLC ± .005 ; 4 PLC ± - ; ANGLES ± -	CHK L. CASTAGNA 29-OCT-84	NAME RECEPTACLE ASSEMBLY BOX II, 4-ROW W/.149 SOLDER TAILS
		APVD L. CASTAGNA 29-OCT-84	
		PRODUCT SPEC —	
		APPLICATION SPEC —	SIZE A2 · CAGE CODE 00779 · DRAWING NO C-533285 · RESTRICTED TO —
MATERIAL 1 - 2	FINISH - 3	WEIGHT —	
		CUSTOMER DRAWING	SCALE 4:1 · SHEET 1 OF 2 · REV S2

THIS DRAWING IS UNPUBLISHED. RELEASED FOR PUBLICATION - , N/A .
© COPYRIGHT N/A By - ALL RIGHTS RESERVED.

LOC	DIST
—	—

REVISIONS

P	LTR	DESCRIPTION	DATE	DWN	APVD
	-	SEE SHEET 1	-	—	—

1. HOUSING MATERIAL: POLYPHENYLENE SULFIDE.
COLOR: NATURAL (BROWN).

2. CONTACT MATERIAL: BERYLLIUM COPPER OR COPPER-NICKEL-SILICON PER UNS C70260.

3. CONTACT FINISH: NICKEL UNDERPLATE .000050-.000100 THK ALL OVER GOLD .000030 THK IN CONTACT AREA.
TIN-LEAD PLATED SOLDER TAILS.

4. TE, PART NO. & DATE CODE MARKED IN THIS APPROXIMATE AREA.

5. CONTACT FINISH: NICKEL UNDERPLATE .000050-.000100 THK ALL OVER GOLD .000030 THK IN CONTACT AREA.
TIN PLATED SOLDER TAILS.

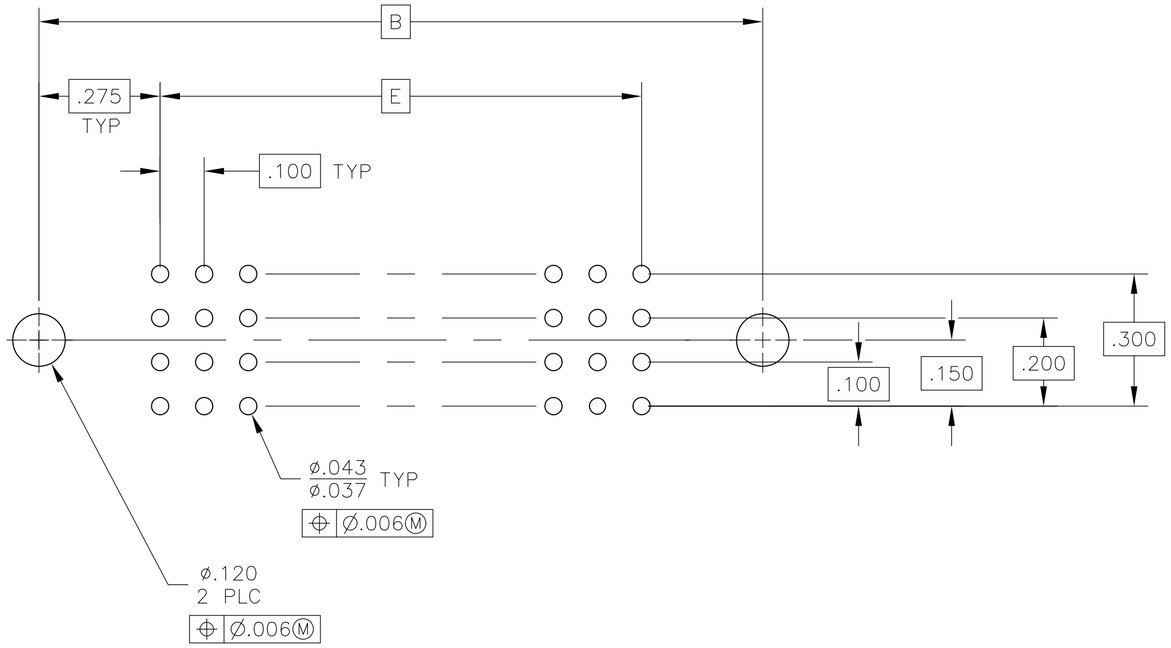

RECOMMENDED PC BOARD LAYOUT

	E	D	C	B	A	POSN	PART NUMBER
5	7.400	74	7.524	7.950	8.250	300	6-533285-2
5	6.400	64	6.524	6.950	7.250	260	6-533285-0
5	5.900	59	6.024	6.450	6.750	240	5-533285-9
5	4.900	49	5.024	5.450	5.750	200	5-533285-7
5	4.400	44	4.524	4.950	5.250	180	5-533285-6
5	3.900	39	4.024	4.450	4.750	160	5-533285-5
5	3.400	34	3.524	3.950	4.250	140	5-533285-4
5	3.100	31	3.224	3.650	3.950	128	5-533285-3
5	2.900	29	3.024	3.450	3.750	120	5-533285-2
5	2.400	24	2.524	2.950	3.250	100	5-533285-1
3	5.700	57	5.824	6.250	6.550	232	3-533285-5
OBSOLETE							
OBSOLETE	.900	9	1.024	1.450	1.750	40	1-533285-5
OBSOLETE	4.700	47	4.824	5.250	5.550	192	1-533285-4
OBSOLETE	1.600	16	1.724	2.150	2.450	68	1-533285-3
3	7.400	74	7.524	7.950	8.250	300	1-533285-2
3	6.900	69	7.024	7.450	7.750	280	1-533285-1
3	6.400	64	6.524	6.950	7.250	260	1-533285-0
3	5.900	59	6.024	6.450	6.750	240	533285-9
3	5.400	54	5.524	5.950	6.250	220	533285-8
3	4.900	49	5.024	5.450	5.750	200	533285-7
3	4.400	44	4.524	4.950	5.250	180	533285-6
3	3.900	39	4.024	4.450	4.750	160	533285-5
3	3.400	34	3.524	3.950	4.250	140	533285-4
3	3.100	31	3.224	3.650	3.950	128	533285-3
3	2.900	29	3.024	3.450	3.750	120	533285-2
3	2.400	24	2.524	2.950	3.250	100	533285-1

533285

THIS DRAWING IS A CONTROLLED DOCUMENT.

DIMENSIONS: INCHES

TOLERANCES UNLESS OTHERWISE SPECIFIED:
0 PLC ± -
1 PLC ± -
2 PLC ± -
3 PLC ± .005
4 PLC ± -
ANGLES ± -

MATERIAL 1 - 2

FINISH - 3

DWN R. SEIFRIED 29-OCT-84
CHK L. CASTAGNA 29-OCT-84
APVD L. CASTAGNA 29-OCT-84
PRODUCT SPEC —
APPLICATION SPEC —
WEIGHT —

TE Connectivity

NAME
RECEPTACLE ASSEMBLY
BOX II, 4-ROW
W/.149 SOLDER TAILS

SIZE	CAGE CODE	DRAWING NO	RESTRICTED TO
A2	00779	C-533285	—

CUSTOMER DRAWING | SCALE 4:1 | SHEET 2 OF 2 | REV S2