General Specifications

Motor Protection:
Auto Restart/Polarity Protection

Insulation Resistance:
10M Ω or over with a DC500V Megger

Dielectric Withstand Voltage: AC 700V 1s

Allowable Ambient Temperature Range:
-10°C ~ +70°C (Operating)
-40°C ~ +70°C (Storage)

IP Code: IP69K

Characteristic Curves

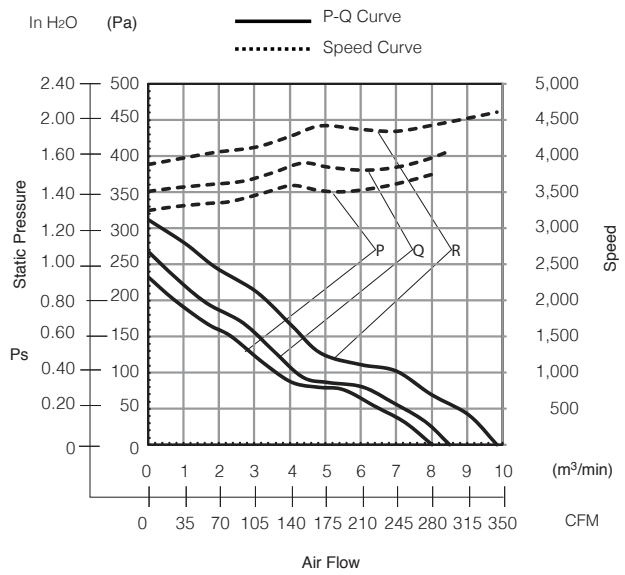

Expected Life

25°C 100,000 Hours (L10)

Material

Casing : Aluminum (Black)
Impeller : Plastic (Black) UL94V-0
Bearing : Ball Bearing
Lead Wire : UL10368, AWG22, +Red, -Black

Outline

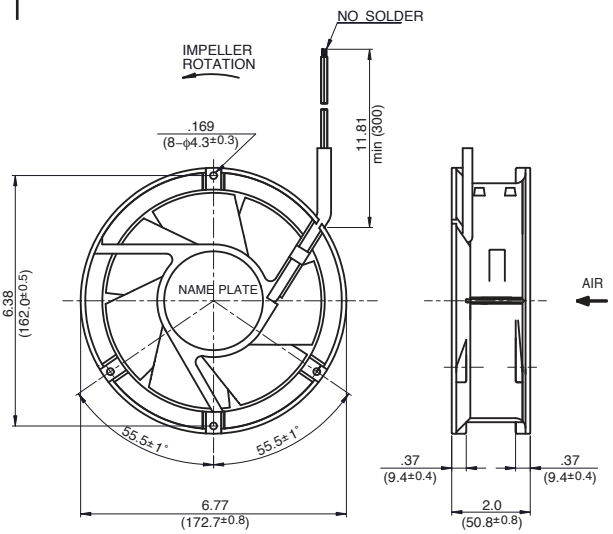

Panel Cut-Outs

Units: inch (mm)

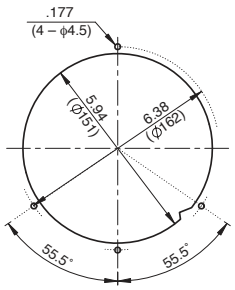

INLET SIDE

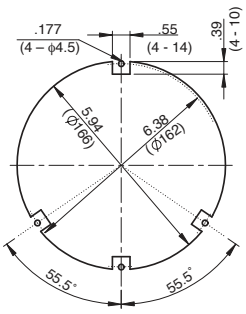

OUTLET SIDE

Specifications

MODEL	Rated Voltage	Operating Voltage	Current	Input Power	Speed	Max. Air Flow		Max. Static Pressure		Noise	Mass
	(V)	(V)	(A)*1	(W)*1	(min⁻¹)*1	CFM*1	(m³/min)*1	in H2O	(Pa)*1	(dB)*1	(g)
17250VA-24P-GA-00	24	18.0 ~ 26.4	1.10	26.4	3750	282.52	8.0	0.93	232.0	56.0	950
17250VA-24Q-GA-00	24	18.0 ~ 26.4	1.30	31.2	4000	300.17	8.5	1.07	267.0	58.0	950
17250VA-24R-GA-00	24	18.0 ~ 26.4	1.80	43.2	4600	346.08	9.8	1.25	312.0	62.0	950
17250VA-48P-GA-00	48	38.0 ~ 52.8	0.55	26.4	3750	282.52	8.0	0.93	232.0	56.0	950
17250VA-48Q-GA-00	48	38.0 ~ 52.8	0.65	31.2	4000	300.17	8.5	1.07	267.0	58.0	950
17250VA-48R-GA-00	48	38.0 ~ 52.8	0.90	43.2	4600	346.08	9.8	1.25	312.0	62.0	950

Rotation: Clockwise Airflow Outlet: Air Out Over Struts *1: Average Values in Free Air Note: PWM/Locked Rotor/Tach Available