© 2020 TE Connectivity. All Rights Reserved.

REVISIONS					
F	LTR	DESCRIPTION	DATE	DWN	APVD
	B2	REVISION (ECR-23-172147)	20MAR23	S.W	Z.Z
	B3	REVISION (ECR-23-172147)	20APR23	S.W	Z.Z
	B4	REVISION (ECR-23-180164)	07JUL23	S.W	Z.Z
	B5	REVISION (ECR-23-184108)	18AUG23	S.W	Z.Z

B5

P/N	REFERENCE VIEW OF CODINGS. 3POS. WITH CODING ON PANEL MOUNTING SIDE 1:1	
2371113-1	CODE A CODE WITH PLUG - A	CODE WITH PANEL - A
2371113-2	CODE B CODE WITH PLUG - B	CODE WITH PANEL - B
2371113-3	CODE C CODE WITH PLUG - C	CODE WITH PANEL - C
2371113-4	CODE D CODE WITH PLUG - D	CODE WITH PANEL - D
2371113-5	CODE E CODE WITH PLUG - E	CODE WITH PANEL - E
2371113-6	CODE F CODE WITH PLUG - F	CODE WITH PANEL - F

P/N	REFERENCE VIEW OF CODINGS. 2POS. WITH CODING ON PANEL MOUNTING SIDE 1:1		
2-2371113-1	CODE A CODE WITH PLUG - A	CODING'S DIMS REFER TO 2371113-1	CODE WITH PANEL - A
2-2371113-2	CODE B CODE WITH PLUG - B	CODING'S DIMS REFER TO 2371113-2	CODE WITH PANEL - B
2-2371113-3	CODE C CODE WITH PLUG - C	CODING'S DIMS REFER TO 2371113-3	CODE WITH PANEL - C
2-2371113-4	CODE D CODE WITH PLUG - D	CODING'S DIMS REFER TO 2371113-4	CODE WITH PANEL - D
2-2371113-5	CODE E CODE WITH PLUG - E	CODING'S DIMS REFER TO 2371113-5	CODE WITH PANEL - E
2-2371113-6	CODE F CODE WITH PLUG - F	CODING'S DIMS REFER TO 2371113-6	CODE WITH PANEL - F

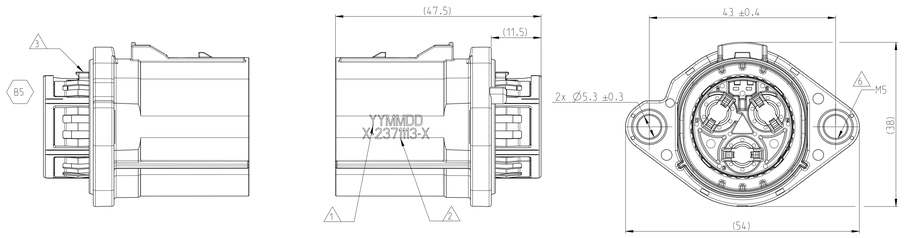

2371113-1 AS SHOWN
1:1

EXPLODE VIEW
2371113-1 AS SHOWN
1:1

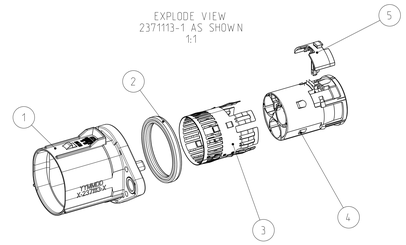

B5

P/N	REFERENCE VIEW OF CODINGS. 3POS. WITHOUT CODING ON PANEL MOUNTING SIDE 1:1	
1-2371113-1	CODE A CODE WITH PLUG - A	CODE WITH PANEL - NEUTRAL
1-2371113-2	CODE B CODE WITH PLUG - B	CODE WITH PANEL - NEUTRAL

P/N	REFERENCE VIEW OF CODINGS. 2POS. WITHOUT CODING ON PANEL MOUNTING SIDE 1:1	
3-2371113-1	CODE A CODE WITH PLUG - A	CODE WITH PANEL - NEUTRAL
3-2371113-2	CODE B CODE WITH PLUG - B	CODE WITH PANEL - NEUTRAL

NOTE:
1. PRODUCTION DATE (YYMMDD)
2. ASSEMBLY P/N MARKING
3. TPA AND CPA ARE AT PRE-LOCK POSITION
4 . COUNTERPART INFO:
  1). PLUG X-2371035-X
  2). USED Ø4mm PIN CONTACTS

USED CABLE	$2.5mm^2$		$4mm^2$		$6mm^2$	
PIN CONTACT	2349180-1 (Ag)	1-2349180-1 (AgSn)	2349180-2 (Ag)	1-2349180-2 (AgSn)	2349180-3 (Ag)	1-2349180-3 (AgSn)

  3). USED HVIL TERMINAL

HVIL TERMINAL PN	PRODUCT GROUP DRAWING	APPLICABLE WIRE SIZE
5-1418758-3	1418754	$0.35mm^2$
5-1418760-3	1418754	$0.5mm^2$

5 . GENERAL SPEC:
  1). WORKING TEMP: -40~140°C
  2). WORKING VOLTAGE: 1000VDC
  3). DEGREE OF PROTECTION: IPXXB, IP6K9K, IP67
  4). FLAMMABILITY: UL94 V-0
6. MOUNTING SCREW M5 W/HT SCREW HEAD OR WASHER Ø9mm MIN, Ø11mm MAX;
  RECOMMANDED TIGHTENING TORQUE 6±0.5N•m

1	1	1	1	1	1	TPA	PA66-GF30 V0	RED	5
1	-	-	-	-	-	INNER HOUSING - 3 POS	PA66-GF30 V0	BROWN	4
-	1	-	-	-	-		PA66-GF30 V0	GREEN	
-	-	1	-	-	-		PA66-GF30 V0	PURPLE	
-	-	-	1	-	-		PA66-GF30 V0	BLUE	
-	-	-	-	1	-		PA66-GF30 V0	WHITE	
-	-	-	-	-	1		PA66-GF30 V0	BLACK	
1	1	1	1	1	1	SHIELDING	COPPER ALLOY	-	3
1	1	1	1	1	1	FACIAL SEAL	VMQ	GREEN	2
1	-	-	-	-	-	OUTER HOUSING WITH CODING	PA66-GF30 V0	ORANGE	1
-	1	-	-	-	-				
-	-	1	-	-	-				
-	-	-	1	-	-				
-	-	-	-	1	-				
-	-	-	-	-	1				
-	-	-	-	-	-	DESCRIPTION	MATERIAL	COLOR	ITEM
F	E	D	C	B	A	CODING			
2371113-6	2371113-5	2371113-4	2371113-3	2371113-2	2371113-1	ASSEMBLY P/N			
B	B	B	B	B	B	REVISION OF ASSEMBLY			
Q'TY						PART LIST			

1	1	1	1	1	1	TPA	PA66-GF30 V0	RED	5
1	-	-	-	-	-	INNER HOUSING - 2 POS	PA66-GF30 V0	BROWN	4
-	1	-	-	-	-		PA66-GF30 V0	GREEN	
-	-	1	-	-	-		PA66-GF30 V0	PURPLE	
-	-	-	1	-	-		PA66-GF30 V0	BLUE	
-	-	-	-	1	-		PA66-GF30 V0	WHITE	
-	-	-	-	-	1		PA66-GF30 V0	BLACK	
1	1	1	1	1	1	SHIELDING	COPPER ALLOY	-	3
1	1	1	1	1	1	FACIAL SEAL	VMQ	GREEN	2
1	-	-	-	-	-	OUTER HOUSING WITH CODING	PA66-GF30 V0	ORANGE	1
-	1	-	-	-	-				
-	-	1	-	-	-				
-	-	-	1	-	-				
-	-	-	-	1	-				
-	-	-	-	-	1				
-	-	-	-	-	-	DESCRIPTION	MATERIAL	COLOR	ITEM
F	E	D	C	B	A	CODING			
2-2371113-6	2-2371113-5	2-2371113-4	2-2371113-3	2-2371113-2	2-2371113-1	ASSEMBLY P/N			
B	B	B	B	B	B	REVISION OF ASSEMBLY			
Q'TY						PART LIST			

B5

1	1	TPA	PA66-GF30 V0	RED	5
-	-	INNER HOUSING - 3 POS	PA66-GF30 V0	BROWN	4
-	-		PA66-GF30 V0	GREEN	
-	-		PA66-GF30 V0	PURPLE	
-	-		PA66-GF30 V0	BLUE	
1	-		PA66-GF30 V0	WHITE	
-	1		PA66-GF30 V0	BLACK	
1	1	SHIELDING	COPPER ALLOY	-	3
1	1	FACIAL SEAL	VMQ	GREEN	2
1	1	OUTER HOUSING WITHOUT CODING	PA66-GF30 V0	ORANGE	1
-	-	DESCRIPTION	MATERIAL	COLOR	ITEM
B	A	CODING			
1-2371113-2	1-2371113-1	ASSEMBLY P/N			
B	B	REVISION OF ASSEMBLY			
PART LIST					

1	1	TPA	PA66-GF30 V0	RED	5
-	-	INNER HOUSING - 2 POS	PA66-GF30 V0	BROWN	4
-	-		PA66-GF30 V0	GREEN	
-	-		PA66-GF30 V0	PURPLE	
-	-		PA66-GF30 V0	BLUE	
1	-		PA66-GF30 V0	WHITE	
-	1		PA66-GF30 V0	BLACK	
1	1	SHIELDING	COPPER ALLOY	-	3
1	1	FACIAL SEAL	VMQ	GREEN	2
1	1	OUTER HOUSING WITHOUT CODING	PA66-GF30 V0	ORANGE	1
-	-	DESCRIPTION	MATERIAL	COLOR	ITEM
B	A	CODING			
3-2371113-2	3-2371113-1	ASSEMBLY P/N			
B	B	REVISION OF ASSEMBLY			
PART LIST					

REFERENCE MOUNTING INTERFACE
1:1

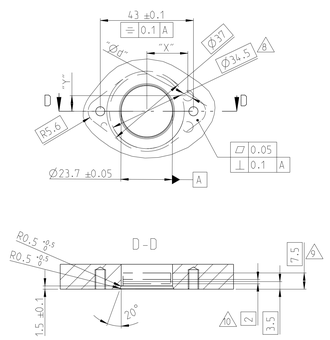

NOTE:
7 . REFERENCE MOUNTING INTERFACE / ASSEMBLY OPENING
8. SEALING AREA, REQUIREMENT:
  1). UNPROCESSED Rz<25 / PROCESSED Rt≤10, Rz≤6.3, Ra≤0.8
  2). NO FLASH, OFFSET, PORES AND SHARP EDGES PERMITTED
  3). SURFACE DAMAGES LIKE FIRE-CRACKS, SCORES ETC. ARE NOT PERMITTED
9. MINIMUM HOLE DEPTH, SURFACE REQUIREMENT:
  1). Rt≤10, Rz≤6.3, Ra≤0.8
  2). NO FLASH, OFFSET, PORES AND SHARP EDGES PERMITTED
10. SCREEN / SHIELDING CONTACT AREA
11 . CODING DIMENSION AND TOLERANCE:

	COORDINATE "X"	COORDINATE "Y"	DIAMETER "Ø d"	DEPTH
CODING "A"	+18.9±0.05	+7.225±0.05	4.85±0.05	3.65 MIN
CODING "B"	+18.9±0.05	-7.225±0.05		
CODING "C"	+19.8±0.05	-6.55±0.05	2.65±0.05	
	-19.8±0.05			
CODING "D"	+19.8±0.05	+6.55±0.05		
		-6.55±0.05		
CODING "E"	+18±0.05	-7.9±0.05		
	-18±0.05			
CODING "F"	+18±0.05	+7.9±0.05		
		-7.9±0.05		

THIS DRAWING IS A CONTROLLED DOCUMENT.

DIMENSIONS: mm

TOLERANCES UNLESS OTHERWISE SPECIFIED:
0 PLC ±-
1 PLC ±0.
2 PLC ±0.
3 PLC ±0.
4 PLC ±0.
ANGLES ±-
FINISH -
MATERIAL - -

DWN Y.YANG 07MAY2020
CHK E.JIANG 21MAY2020
APVD Y.YIN 21MAY2020

TE Connectivity

NAME HEADER ASSEMBLY HD400, 2POS / 3POS CONNECTOR

PRODUCT SPEC 108-160170
APPLICATION SPEC 114-160095
WEIGHT -

SIZE A0 | CASE CODE 00779 | DRAWING NO C-2371113 | RESTRICTED TO -

CUSTOMER DRAWING | SCALE 2:1 | SHEET 1 OF 1 | REV B5

4806 (3/13)