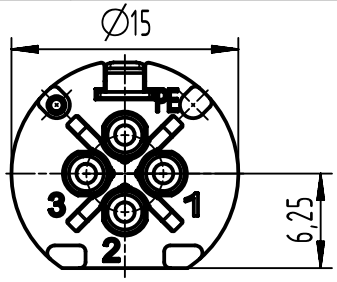

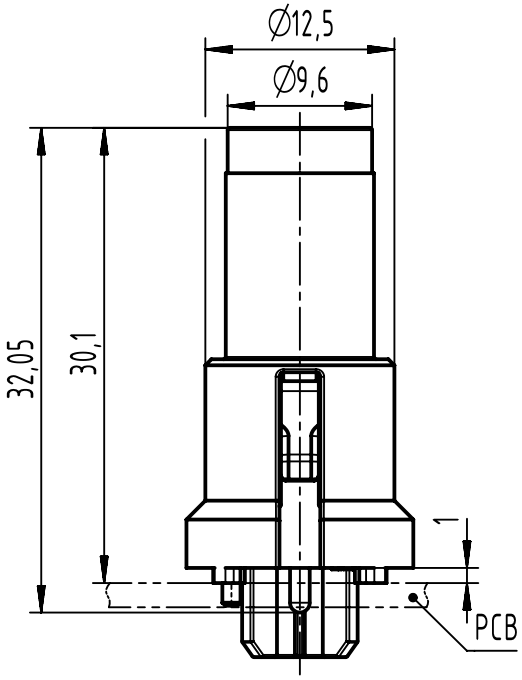

contact face based on
IEC 61076-2-111

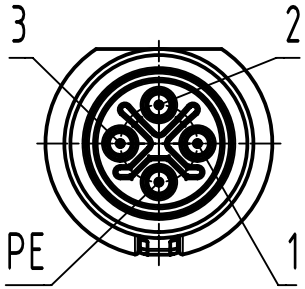

recommended PCB-layout

(5:1)

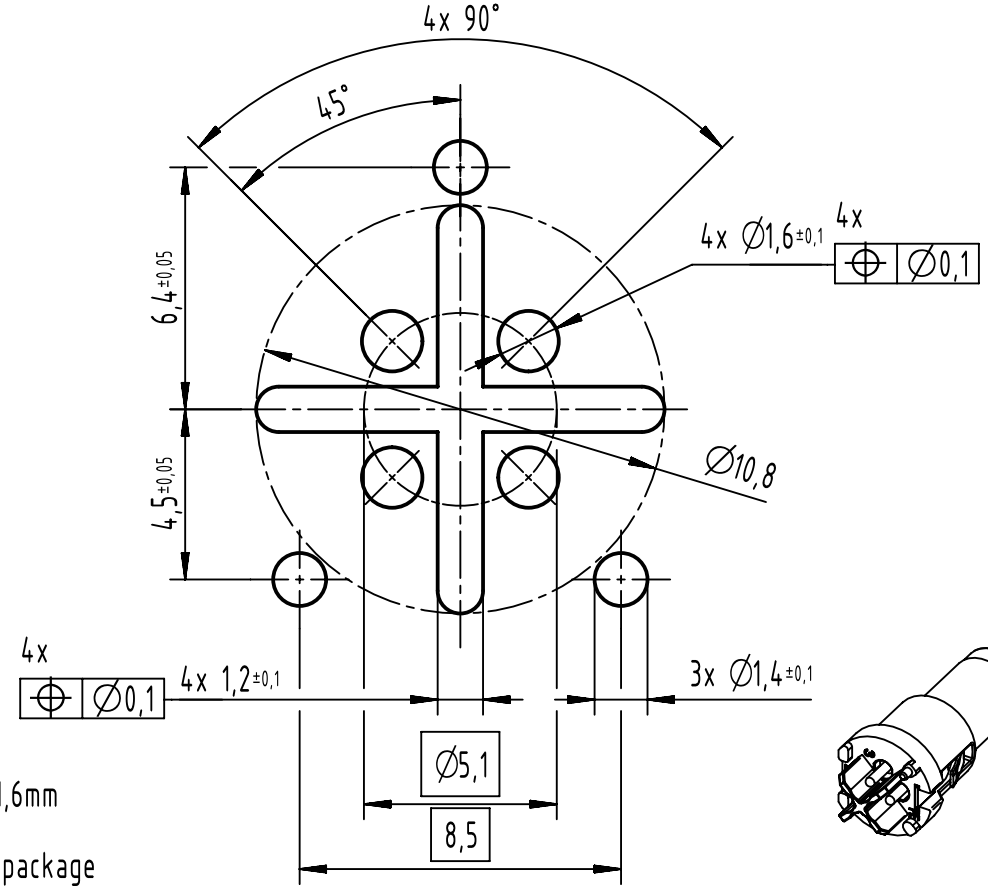

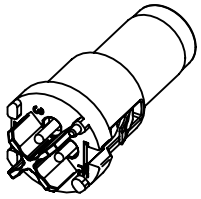

- recommended PCB: 1,6mm
- 30 pcs. carton box package

All Dimensions in mm Original Size DIN A4	Scale 2:1	Free size tol.		Ref. Sub.	
All rights reserved Department EL PD	Created by 402918	Inspected by MICLAUS	Standardisation ROEBEN	Date 2021-12-06	State Final Release
HARTING D-32339 Espelkamp	Title M12-PCB-THR-2PC-4P-SCOD-M-STR-SHLD				Doc-Key / ECM-Nr. 100833667/UGD/006/D 500000207442
	Type TB	Number 21033091400		Rev. D	Page 1/1

A4