DRAWING MADE IN AMERICAN PROJECTION

WAS P-79-6102

1. PARTS COMPLY WITH TE SOLDERABILITY SPEC. 109-11-3
2. CONTACT IS PLATED OVERALL WITH .000050 NICKEL, THEN .000030 GOLD OVER CONTACT LENGTH INDICATED AND TIN PLATED ON SOLDER TAIL END.
3. DIMENSION SHOWN REPRESENT PRODUCT IN DRY CONDITION. ADDITIONAL 2% GROWTH DUE TO END USE LOCATION MOISTURE ABSORPTION MAY OCCUR AND SHOULD BE ACCOUNTED FOR.

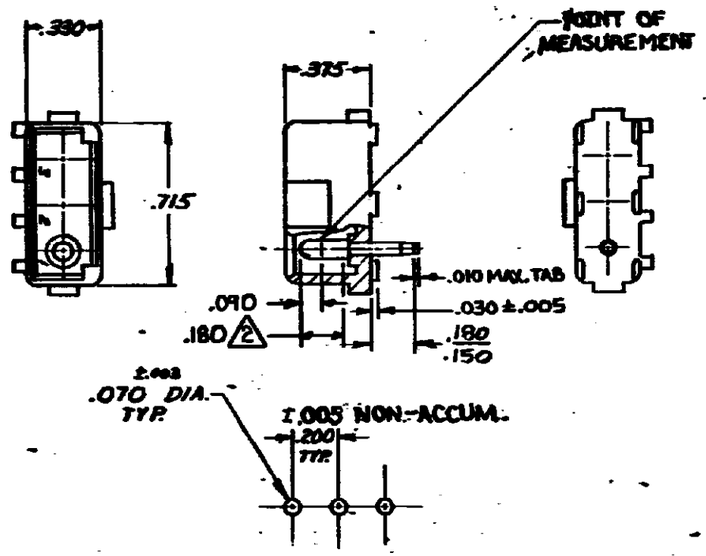

RECOMMENDED LAYOUT FOR .062 THICK P.C. BOARD

SUPERSEDED BY 1586532-2

5-350541-2	NYLON - GREEN	COPPER ALLOY - GOLD 2
~~350541-2~~	~~NYLON - NATURAL~~	~~COPPER ALLOY - GOLD 2~~
350541-1	NYLON - NATURAL	COPPER ALLOY - PRE-TIN
ASSEMBLY NO.	HSG. MATL & COLOR	PIN MATL & FINISH

LTR	REVISION RECORD	DR	CHK	DATE
L3	REVISED PER ECR-21-117185	PJ	VS	25OCT 2021
L2	REVISED PER ECR-18-008156	JB/DZ		19JUN 2018
L1	REVISED PER ECR-13-008342	AV/RP		12NOV 2013
L	OBSOLETE 1-1,2L 3-1,4-1,5-1,6-1,7-1, 8-1,9-1,1-2,2-2,3-2 4-2,6-2,7-2,8-2,9-2	KW/RS		4-21-86
K	RESTORED		RS	
K	REV. PER M-7375			
J	WAS REF. M-7285		DH	
H	ADDED NOTE 2 M-6894		DH	
G	ADDED CHAMFER M-5934		DH	
F	DIM. Tail Length M-5334		DH	
E	REVISED M-3932		DH	
D	ECN M-3877		DH	9-7-76
C	RELEASED		DH	7-7-76
B	ECN M-3462			
A	E.C.N. M-3152			

REQUIRED PER ASSEMBLY — DESCRIPTION

© 1973 BY AMP INCORPORATED. ALL RIGHTS RESERVED.
AMP PRODUCTS COVERED BY PATENTS AND/OR PATENTS PENDING.

CUSTOMER COPY REFERENCE ONLY

DR 3-20-73 G. Eckman
CHK 4/4/73
DE 4-10-73
APP 4-10-73

MATERIAL AND FINISH: SEE TABLE

TE Connectivity

CLASS .084 DIA. PIN
TYPE POSITIVE LOCK
WIRE RANGE — INSULATION
TOLERANCE EXCEPT AS NOTED ±.015 ±1° 0'
SCALE
FAC CM
B
NO 350541
L3

NAME 3 CIRCUIT MATE-N-LOK P.C. BOARD HEADER

350541

DIMENSIONS IN INCHES, DO NOT SCALE PRINT.