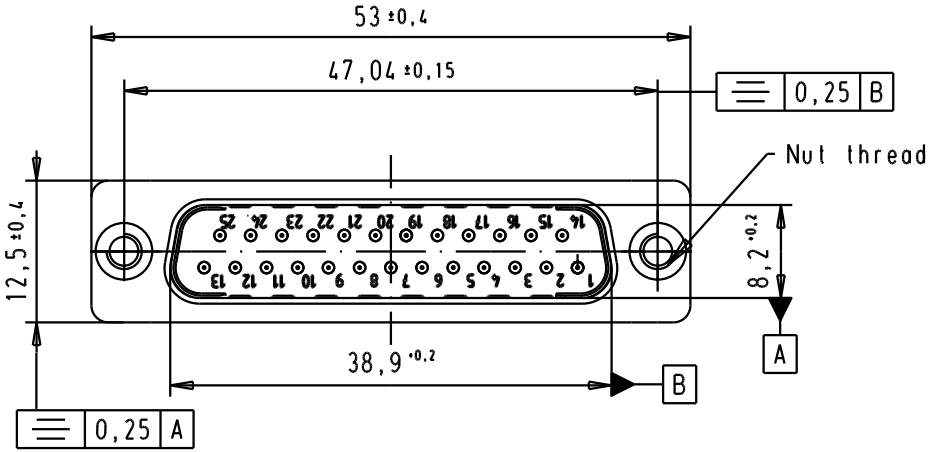

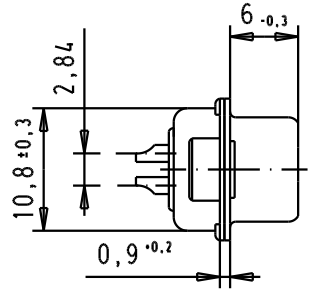

Solder bucket for AWG 20

SPECIFICATION

Mating Cycles	500
Filter type	C
Capacitance	1000pf ±20%
Working Voltage	100v
Current Rating	7.5A
Insulation Resistance	>1GΩ

FREQUENCY (MHz)	ATTENUATION (dB)
5	1dB
10	3dB
50	12dB
100	20dB
500	34dB
1000	30dB

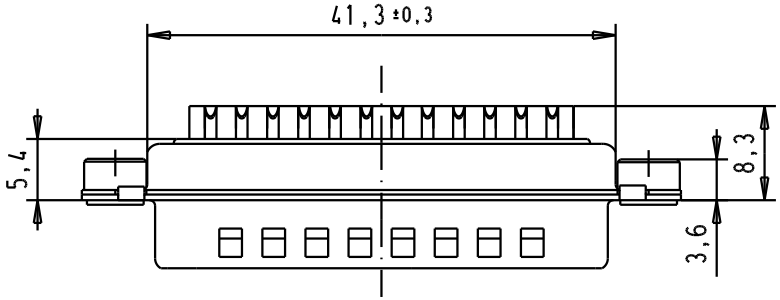

09643217238	M3		33423	06/02/06	JMDR
09643217237	UNC 4-40		31058	8-JUL-02	CV
Part number	Nut thread		Mod.	Dat.	Name

	Dat.	Name
Detail.	8-JUL-02	CV
Insp.		
Stand.		

All Dim. in mm
Orig. Size DIN A 4

HARTING EURL
F-95972 Paris

D-Sub, male, Straight
25 Poles, turned solder buckets,
tin plated shell with dimples
and clinch nuts

Ma?Mstab/ Scale: 1.5:1

TB 0964321723x

Sub.

Blatt/ Page: 1/1