MALE PLUG M8 90° ANGLED

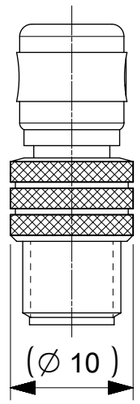

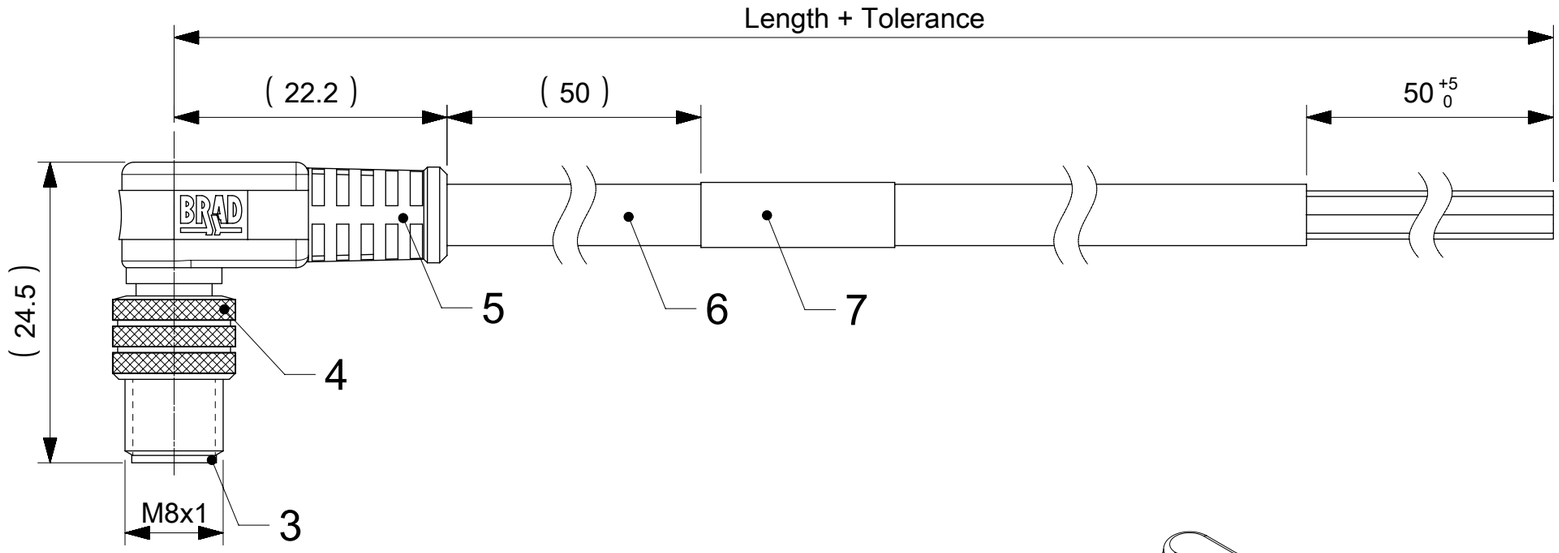

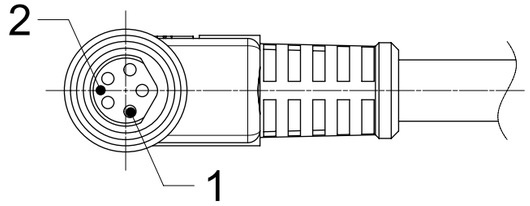

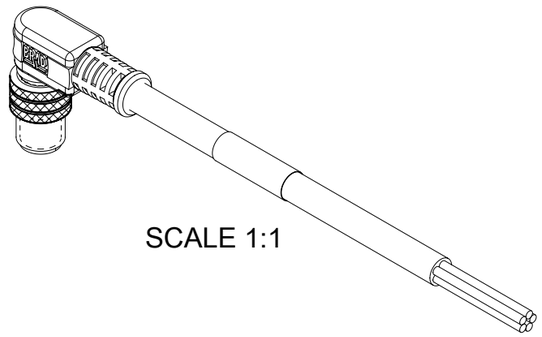

SCALE 1:1

NOTES:

RATED VOLTAGE: 3 contacts 60V AC/DC
4 and 5 contacts 30V AC/DC
CURRENT RATING: 3, 4, 5 contacts 3A
PROTECTION CLASS: IP 67
TEMPERATURE: -25°C / +80°C

CONTACT POSITION FRONT VIEW:

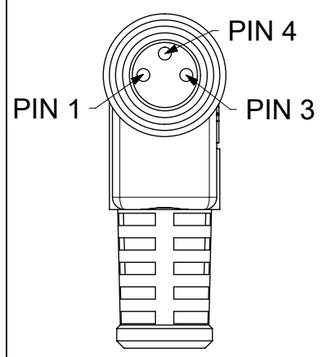

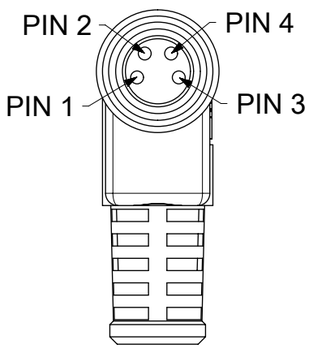

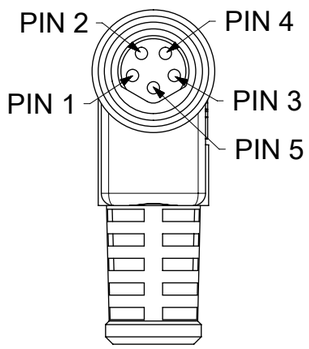

3 POLES		4 POLES		5 POLES	
PIN	WIRE	PIN	WIRE	PIN	WIRE
1	BROWN	1	BROWN	1	BROWN
3	BLUE	2	WHITE	2	WHITE
4	BLACK	3	BLUE	3	BLUE
		4	BLACK	4	BLACK
				5	GREY
CODING ACCORDING TO IEC 61076-2-104					

FOR OPTIONS SEE - NUMERICAL CODE - ON SHEET 2

ITEM	QTY.	DESCRIPTION	MATERIAL	FINISH
7	1	LABEL OR PRINTING	VINYL / ---	---
6	-	CABLE	SEE SHEET 2	---
5	-	OVERMOULDING BLACK	TPU	---
4	1	COUPLING NUT M8 MALE	BRASS	NICKEL
3	1	SLEEVE	BRASS	NICKEL
2	1	INSERT MALE BLACK	TPU	---
1	3 / 4 / 5	CONTACT M8 MALE	BRASS	SELECTIVE Au OVER Ni

THIS DRAWING CONTAINS INFORMATION THAT IS PROPRIETARY TO MOLEX ELECTRONIC TECHNOLOGIES, LLC AND SHOULD NOT BE USED WITHOUT WRITTEN PERMISSION

SYMBOLS: E = 0, E = 0, E = 0, S = 0, ▼ = 0, V = 0, ☒ = 0, ■ = 0, V = 0

DIMENSION UNITS: mm
SCALE: 2:1
GENERAL TOLERANCES (UNLESS SPECIFIED)
ANGULAR TOL ± 1.0 °
4 PLACES ±
3 PLACES ±
2 PLACES ± 0.05
1 PLACE ± 0.3
0 PLACES ± 0.5
DRAFT WHERE APPLICABLE MUST REMAIN WITHIN DIMENSIONS

CURRENT REV DESC:
EC NO: 600840
DRWN: FDAFERNER 2018/06/29
CHK'D: RSILLER 2018/07/05
APPR: RSILLER 2018/07/05
INITIAL REVISION:
DRWN: JMARSZALEK 2016/09/05
APPR: RSILLER 2016/09/09

THIRD ANGLE PROJECTION
DRAWING: A3-SIZE
SERIES: 120086

molex

CSE M8 XP AC BC RA PVC XM SE

PRODUCT CUSTOMER DRAWING

DOCUMENT NUMBER	DOC TYPE	DOC PART	REVISION
1200868083	PSD	000	A1

MATERIAL NUMBER	CUSTOMER	SHEET NUMBER
SEE PART LIST	GENERAL MARKET	1 OF 3

DOCUMENT STATUS	P1	RELEASE DATE	2018/07/05 07:09:55

FORMAT: molex_B_size_A3
REVISION: H
DATE: 2018/01/18

ENGINEERING NO. - NUMERICAL CODE (Available parts see PART LIST table. Other parts available upon request).

OPTIONS

4	0	X	0	0	7	X	X	X	X	X	X	X	X

- 40=Nano-Change M8x1 Single ended
- Poles: 3=3 Poles, 4=4 Poles, 5=5 Poles
- Heads style: 007=Plug Male Angled
- Cable type: See Table
- Units: M=Meter, C=Centimeter, T=10x Meter
- Length Examples: 005=0.5 units, 010=1 units, 020=2 units, 050=5 units, 100=10 units, 150=15 units, 200=20 units
- Overmold color: Blank (Standard)=Black, A=Grey / G=Black / Y=Yellow
  H= 2 pcs. of I/D Carrier PVC Transparent (Cables Ixx & P82 always with 2 pcs. of I/D Carrier)

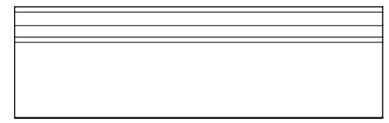

CABLE INFORMATION (for more information see Cable Data Sheet).

CABLE TYPE	NO. OF WIRES	CROSS SECTION	CABLE JACKET	UL	CSA	STATIC: TEMP. / BENDING RADIUS	DYNAMIC: TEMP. / BENDING RADIUS	DRAG CHAIN	SHIELD
E02	3 / 4 / 5	0.25mm²	PVC BLACK	UL 2464/1729	C22.2 I/II A/B 80°/300V	-30°C to +80°C, 10xO.D.	-10°C to +80°C, 15xO.D.	-	-
H08	3 / 4 / 5	0.25mm²	PUR BLACK LS0H	UL 21198/10493	C22.2 I/II A/B 80°/300V	-40°C to +80°C, 5xO.D.	-25°C to +80°C, 10xO.D.	2 000 000 cycles, Temp max 60°C	-
I02	3 / 4	0.25mm²	PVC CEI GREY	-	-	-30°C to +70°C	-5°C to +70°C	-	-
P02	3 / 4 / 5	0.25mm²	PUR / PVC BLACK	-	-	-30°C to +80°C, 7xO.D.	-5°C to +80°C, 15xO.D.	-	-

CABLE LENGTH TOLERANCES

OVER	UP TO AND INCLUDING	TOLERANCES
0	305mm	+19mm
305mm	915mm	+45mm
915mm	1830mm	+56mm
1830mm	3660mm	+89mm
3660mm	7320mm	+165mm
7320mm	14640mm	+317mm
14640mm	30500mm	+610mm
30500mm	>	+2% of finished length

THIS DRAWING CONTAINS INFORMATION THAT IS PROPRIETARY TO MOLEX ELECTRONIC TECHNOLOGIES, LLC AND SHOULD NOT BE USED WITHOUT WRITTEN PERMISSION

SYMBOLS: E = 0, C = 0, B = 0, S = 0, ▼ = 0, F = 0, ☒ = 0, ■ = 0, ▽ = 0

DIMENSION UNITS: mm | SCALE: 2:1

GENERAL TOLERANCES (UNLESS SPECIFIED)

ANGULAR TOL	±	1.0 °
4 PLACES	±	
3 PLACES	±	
2 PLACES	±	0.05
1 PLACE	±	0.3
0 PLACES	±	0.5

DRAFT WHERE APPLICABLE MUST REMAIN WITHIN DIMENSIONS

CURRENT REV DESC:

EC NO: 600840
DRWN: FDAFERNER 2018/06/29
CHK'D: RSILLER 2018/07/05
APPR: RSILLER 2018/07/05

INITIAL REVISION:
DRWN: JMARSZALEK 2016/09/05
APPR: RSILLER 2016/09/09

THIRD ANGLE PROJECTION | DRAWING: A3-SIZE | SERIES: 120086

molex

CSE M8 XP AC BC RA PVC XM SE

PRODUCT CUSTOMER DRAWING

DOCUMENT NUMBER	DOC TYPE	DOC PART	REVISION
1200868083	PSD	000	A1

MATERIAL NUMBER	CUSTOMER	SHEET NUMBER
SEE PART LIST	GENERAL MARKET	2 OF 3

DOCUMENT STATUS	P1	RELEASE DATE	2018/07/05 07:09:55

FORMAT: market-branded-A3
REVISION: H
DATE: 2018/01/16

PART LIST

No.	Part No.	Engineering No.	Cable Length
1	1200270106	403007E02M020	2m
2	1200270483	404007E02M020	2m
3	1200270811	405007P02M005	0.5m
4	1200271131	404007P02M050	5m
5	1200868061	405007P02M020	2m
6	1200868083	405007E02M020	2m
7	1200868176	405007E02M050	5m
8	1200868177	405007E02M100	10m
9	1200868323	403007E02M010	1m
10	1200868324	403007E02M050	5m
11	1200868325	403007E02M100	10m
12	1200868326	403007I02M003	0.3m
13	1200868327	403007I02M010	1m
14	1200868328	403007I02M020	2m
15	1200868329	403007P02M020	2m
16	1200868330	403007P02M050	5m
17	1200868331	403007P02M100	10m
18	1200868332	403007P02M150	15m
19	1200868333	403007P02M200	20m
20	1200868378	404007E02M050	5m
21	1200868379	404007E02M100	10m
22	1200868380	404007I02M020	2m
23	1200868381	404007P02M010G	1m
24	1200868382	404007P02M020	2m
25	1200868393	403007H08M020	2m
26	1200868394	404007H08M020	2m
27	1200868398	405007H08M020	2m
28	1200868489	404007E02M010	1m
29	1200868490	403007H08M010	1m
30	1200868491	403007H08M050	5m
31	1200868492	403007H08M100	10m
32	1200868493	404007H08M010	1m
33	1200868494	404007H08M050	5m
34	1200868495	404007H08M100	10m
35	1200868528	403007P02M010	1m

No.	Part No.	Engineering No.	Cable Length
36	1200868542	404007P02M010	1m
37	1200868543	404007P02M100	10m
38	1200868808	403007E02M200	20m
39	1200868850	405007H08M010	1m
40	1200868851	405007H08M050	5m
41	1200868852	405007H08M100	10m
42	1200868858	405007E02M010	1m
43			
44			
45			
46			
47			
48			
49			
50			
51			
52			
53			
54			
55			
56			
57			
58			
59			
60			
61			
62			
63			
64			
65			
66			
67			
68			
69			
70			

No.	Part No.	Engineering No.	Cable Length
71			
72			
73			
74			
75			
76			
77			
78			
79			
80			
81			
82			
83			
84			
85			
86			
87			
88			
89			
90			
91			
92			
93			
94			
95			
96			
97			
98			
99			
100			
101			
102			
103			
104			
105			

No.	Part No.	Engineering No.	Cable Length
106			
107			
108			
109			
110			
111			
112			
113			
114			
115			
116			
117			
118			
119			
120			
121			
122			
123			
124			
125			
126			
127			
128			
129			
130			
131			
132			
133			
134			
135			
136			
137			
138			
139			
140			

SYMBOLS

= 0
= 0
= 0
= 0
= 0
= 0
= 0
= 0
= 0
= 0

THIS DRAWING CONTAINS INFORMATION THAT IS PROPRIETARY TO MOLEX ELECTRONIC TECHNOLOGIES, LLC AND SHOULD NOT BE USED WITHOUT WRITTEN PERMISSION

DIMENSION UNITS	SCALE
mm	1:1

GENERAL TOLERANCES (UNLESS SPECIFIED)

ANGULAR TOL	±	1.0 °
4 PLACES	±	
3 PLACES	±	
2 PLACES	±	0.05
1 PLACE	±	0.3
0 PLACES	±	0.5

DRAFT WHERE APPLICABLE MUST REMAIN WITHIN DIMENSIONS

CURRENT REV DESC:

EC NO: 600840
DRWN: FDAFERNER 2018/06/29
CHK'D: RSILLER 2018/07/05
APPR: RSILLER 2018/07/05

INITIAL REVISION:
DRWN: JMARSZALEK 2016/09/05
APPR: RSILLER 2016/09/09

THIRD ANGLE PROJECTION | DRAWING: A3-SIZE | SERIES: 120086

molex

CSE M8 XP AC BC RA PVC XM SE

PRODUCT CUSTOMER DRAWING

DOCUMENT NUMBER	DOC TYPE	DOC PART	REVISION
1200868083	PSD	000	A1

MATERIAL NUMBER	CUSTOMER	SHEET NUMBER
SEE PART LIST	GENERAL MARKET	3 OF 3

DOCUMENT STATUS	P1	RELEASE DATE	2018/07/05 07:09:55

FORMAT: master_molex-A3
REVISION: H
DATE: 2018/01/16