B-140AUH REV. K

REVISIONS			RELEASED	
SYM	DESCRIPTION		DATE	APPROVED
F	20750	REDRAWN, ADDED NOTE 4	8-2-90	WS
G	24654	ADDED ITEM 14	9-21-93	WS
H	0070-05	CHANGED VIEW TO SHOW PHILLIPS SCREWS	05/02/14	CB
J	12-001857	ITEM 7 WAS 50410-054	11/12/01	CB
K	12-007103	2.39 MAX WAS 2.38, .11 WAS .125, 3.02 MAX WAS 3.00	12/04/02	CB

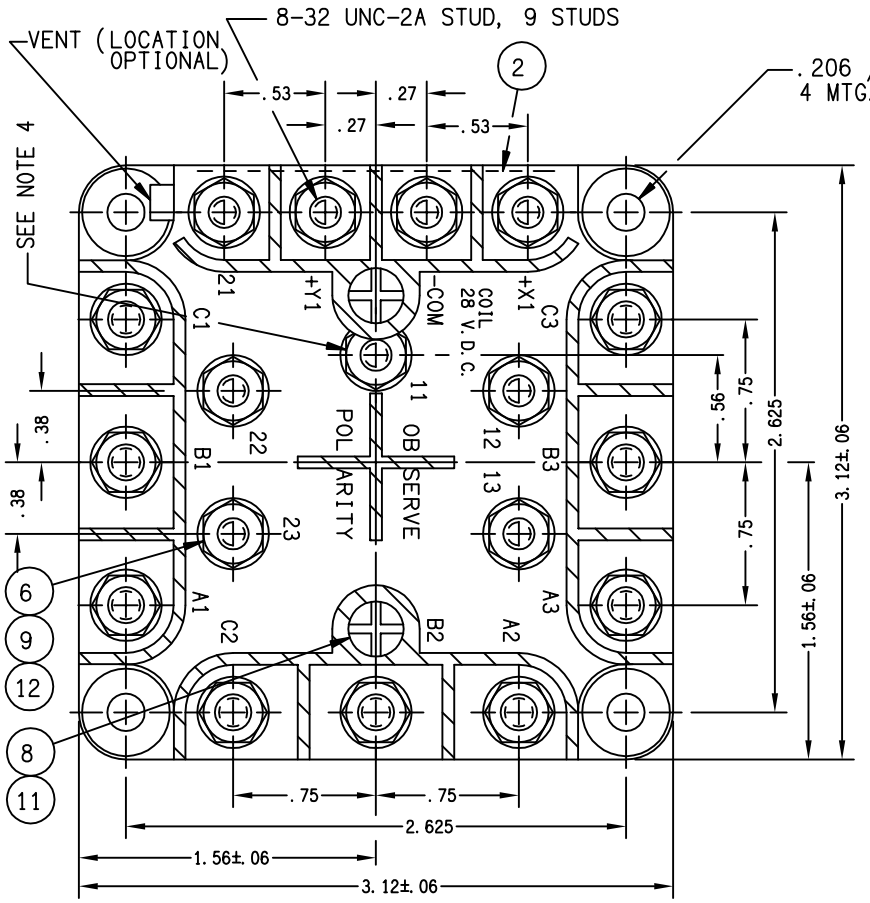

NOMINAL OPERATING VOLTAGE
- COIL +Y1-COM: 18-30 VDC
- COIL +X1-COM: 18-30 VDC
- CONTACTS: 115/200 VAC 400 HZ
- PICKUP VOLTAGE: 18 V. MAX. AT 85C
- DROPOUT VOLTAGE: 7, +0, -5.5 VDC

CONTACT ARRANGEMENT: TPDT NO

CONTACT RATING
- RESISTIVE, MAX. INT. 600 AMP: 70 AMP. A.C.
- INDUCTIVE: 40 AMP. A.C.
- LAMP: 10 AMP. A.C.
- MOTOR: 20 AMP. A.C.
- CAPACITIVE: 70 AMP. A.C.

AUX. CONTACT RATING AT 28 VDC & 115 VAC, 400 HZ.
- RESISTIVE: 5 AMP.
- INDUCTIVE: 3 AMP.
- MOTOR: 3 AMP.

MAIN AND AUX. CONTACT OPERATING TIMES
- CLOSING: 50 MS MAX. AT 18 VDC
- OPENING: 35 MS MAX. AT 28 VDC
- TRANSFER: 10 MS AT 30 VDC

COIL CURRENT AT NOMINAL VOLTAGE
- HOLDING: .35 AMP

MIN. OPERATING CYCLES ELECTRICAL: 50,000

MAX. AMBIENT TEMPERATURE: -40° TO +71°

MAX. WEIGHT: 1 LB. 8 OZ.

NOTES:
1. TERMINAL COVER TO BE STAMPED "DANGER-HIGH VOLTAGE"
2. COIL TRANSIENT VOLTAGE LIMITED TO ±42 VOLTS REFERENCED TO ZERO VOLTS.
3. STAMP OBSERVE POLARITY
4. #11 TERMINAL HEIGHT IS .41

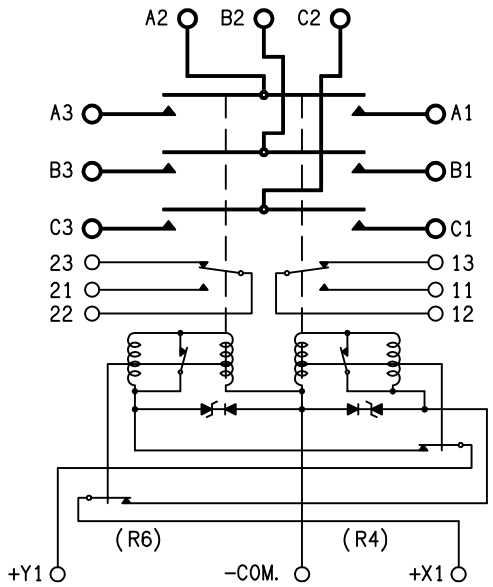

CONFIGURATION CONTROLLED

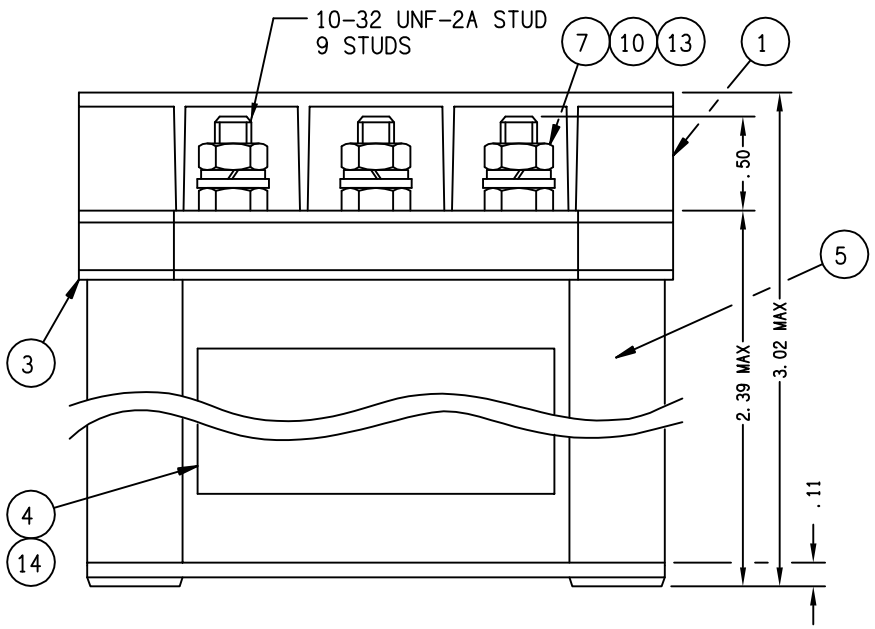

FIND NO	QTY REQD	PART OR IDENTIFYING NO	NOMENCLATURE OR DESCRIPTION	FSCM NO	DRAWING OR SPECIFICATION	MATERIAL OR NOTE
14	1	39529-001	OVERLAY			
13	9	51810-054	WASHER - LOCK NO. 10 SPLIT		MS35338-100	BRONZE
12	9	51808-064	WASHER - LOCK NO. 8 SPLIT		MS35338-99	BRONZE
11	2	51806-034	WASHER - LOCK NO. 6 INT. TOOTH		MS35333-88	BRONZE
10	9	51712-194	WASHER- 7/16 X .203 X .031		AN961-10	BRASS
9	9	51712-104	WASHER- 3/8 X 11/64 X .032		AN961-8	BRASS
8	2	51206-644	SCREW-6-32 X 3/4 RD. HD.		MS35214-29	BRASS
7	9	50410-174	NUT-10-32 X 5/16 X 9/64 HEX			BRASS
6	9	50408-034	NUT-8-32 X 5/16 X 3/32 HEX			BRASS
5	1	19390-060	CONTACTOR ASSEMBLY - PRIMARY			
4	1	16043-001	PLATE - NAME			
3	1	14994-003	PLATE - BASE COVER			
2	1	12771-001	PLATE - WARNING			
1	1	12531-006	SHIELD - TERMINAL			

REF.
SIKORSKY
70550-22901-102

UNLESS OTHERWISE SPECIFIED DIMENSIONS ARE IN INCHES TOLERANCES ON

2 PL DEC.	3 PL DEC.	ANGLES
±.03	±.010	±1°

DR BY	BRI	93/10/27
CHK BY	WS	93/10/28
ENGR	WS	93/11/05
MFG	JF	93/11/05

SIZE: C
CODE IDENT: 74063
SCALE: NONE
SHEET

TE Hartman™ Division • 175 N. DIAMOND STREET MANSFIELD, OHIO 44902

CONTACTOR - T.P.D.T. N.O.
093

DWG NO. B-140AUH

REF TE P/N 1616043-8