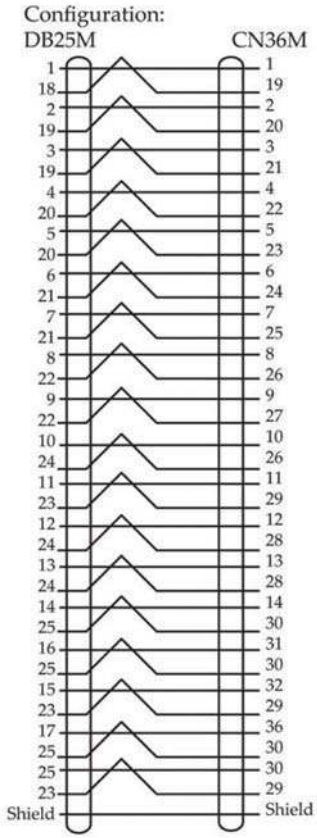

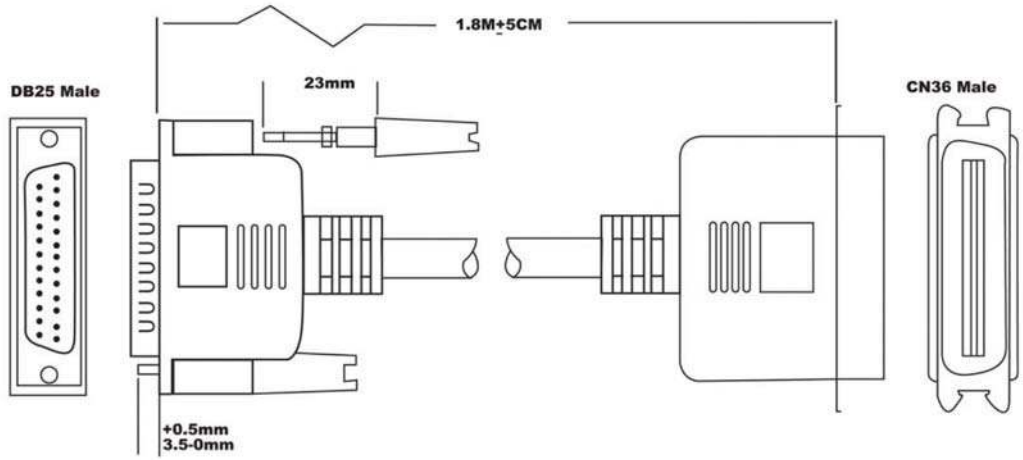

Material:

- Cable: UL20276, #28, 18PAIRS+1+AL/MY+Braid
  (Beige PVC Jacket) O.D:5.0MM
  Insulation conduct with P.P Type
- Both connectors with normal type
- Thumbscrew: #4-40UNC Type
- Both connectors inner colded with copper tape and solder (360°)
  Allover Molded with Beige PVC
  Copper Tape Size:
  DB25 Male:(30mmX95mm)
  CN36 Make:(30mmX110mm)

Note:

1. Total Length: See Item No.
2. Color: Beige
3. Molded Type

RoHS Complaint

Scale	1:1							Name
TOLERANCE						Drawn	11.11.11	Chappell
X.X	±0.40					Approved		
X.XX	±0.25							
X.XXX	±0.15							
Angle	±3°							
			Modification	Date	Name			

ASSMANN WSW components

Item No.
AK711-1.8-R (1.8 Meters)
AK712-3-R (3 Meters)

Title
IEEE 1284 Bi-Directional Printer Cable,
D-Sub 25 Pin Male to CENt 36 Pin Male

Drawing No.

rev00

Replace

Sheet