Alle Rechte vorbehalten/ *All rights reserved*

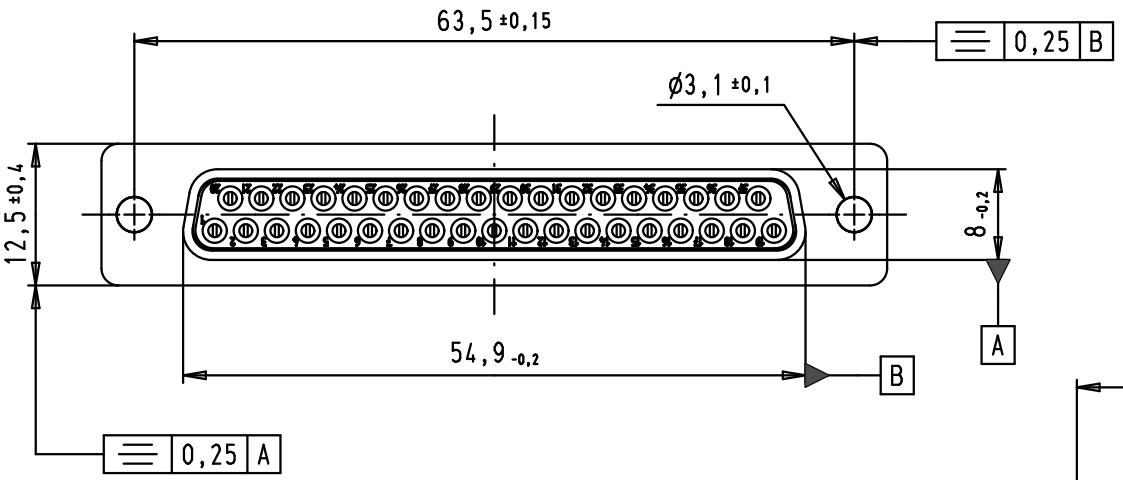

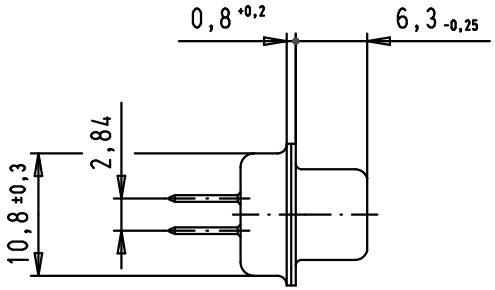

SPECIFICATIONS

Performance level	PL2
Filter type	C
Capacitance	3900 pF±20%
Working voltage	100 V
Current rating	7,5 A
Insulation resistance	>1 GΩ

FREQUENCY (MHz)	ATTENUATION (dB)
5	6
10	11
50	25
100	35
500	35
1000	32

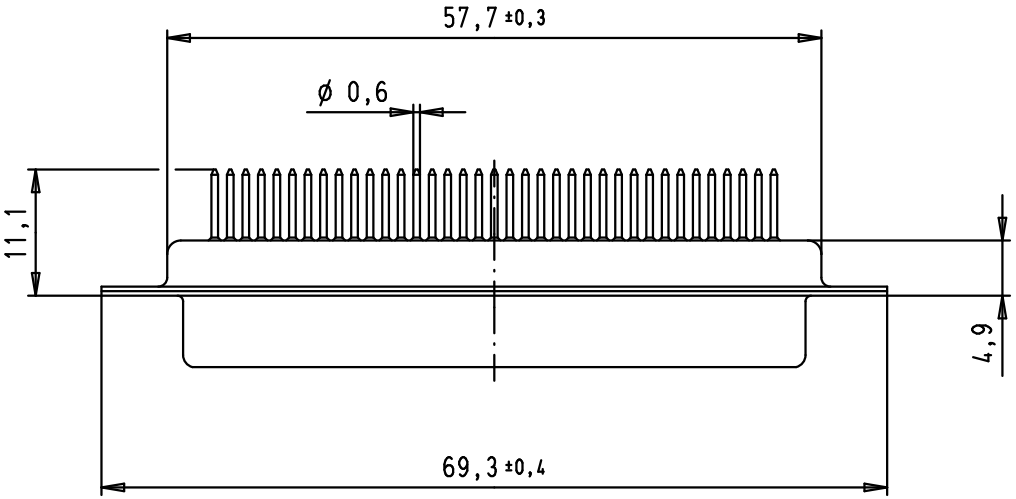

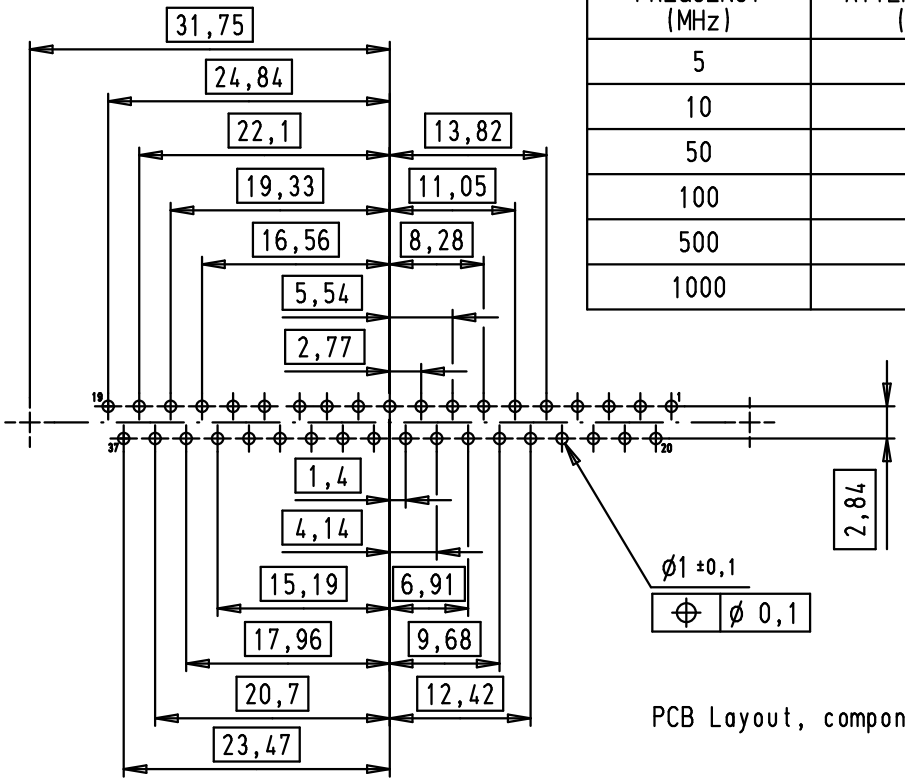

PCB Layout, component side

				Dat.	Name
			Detail.	08/07/02	CV
36283	09/12/11	SD	Insp.	09/12/11	JB
35300	01/12/08	PK	Stand.		
33800	16/08/06	PK			
31058	08/07/02	CV			
Mod.	Dat.	Name			

All Dim. in mm
Orig. Size DIN A 4

HARTING EURL
F-95972 Paris

D-Sub, female, straight, 37 poles, turned solder pins

Maßstab/ *Scale* 1,5:1

TB 09 64 412 7240

Sub.

Blatt/ *Page* 1/1