THIS DRAWING IS UNPUBLISHED. RELEASED FOR PUBLICATION -,- .
© COPYRIGHT - BY TYCO ELECTRONICS CORPORATION. ALL INTERNATIONAL RIGHTS RESERVED.

LOC	DIST
AD	00

REVISIONS

P	LTR	DESCRIPTION	DATE	DWN	APVD
	M	REVISED PER ECO-11-000045	04JAN11	DH	DY

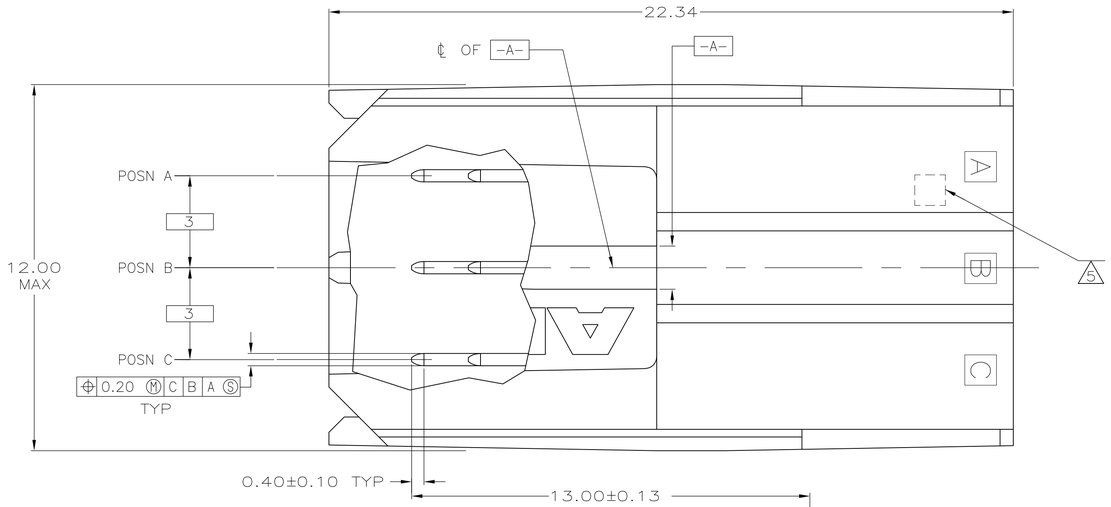

1. MATERIAL: HOUSING: POLYESTER. COLOR: GRAY. UL 94V-0.
   CONTACT: PHOSPHOR BRONZE.
2. FINISH: CONTACT MATING AREA: 1.27μm MIN GOLD OR 0.08μm MIN GOLD OVER 0.76μm MIN PALLADIUM-NICKEL.
   ACTION PIN AREA: 0.5μm MIN TIN LEAD PLATE,
   ALL OVER 1.27μm MIN NICKEL UNDERPLATE.
3. FINISH: CONTACT LUBRICATION WITH BELLCORE APPROVED LUBRICANT. TECHNICAL REFERENCE: TR-NWT-001217 ISSUE 1, SEPT 1992.
4. MATERIAL: HOUSING: LCP; COLOR, BLACK. UL 94V-0.
   CONTACT: PHOSPHOR BRONZE.
5. NUMBER "4" MARKED IN THIS AREA.
6. RESTRICTED PART NUMBER, CONTACT ENGINEERING.
7. MATERIAL: HOUSING: POLYESTER. COLOR: GRAY. UL 94V-0.
   CONTACT: HIGH-CURRENT COPPER ALLOY.
8. REFERENCE APPLICATION SPEC 114-1103 FOR RECOMMENDED PLATED THRU HOLE DIAMETER AND PLATING THICKNESSES.
9. CURRENT RATING 10A/CONTACT FOR PHOS BRONZE CONTACTS AND 16A/CONTACT FOR HIGH CURRENT COPPER ALLOY CONTACTS PER PRODUCT SPEC 108-1651.
10. OBSOLETE PARTS: OBSOLETE CIS STREAMLINING PER D.RENAUD/D.SINISI

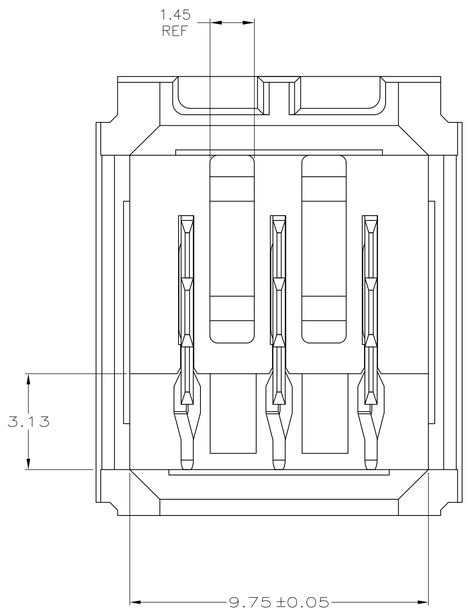

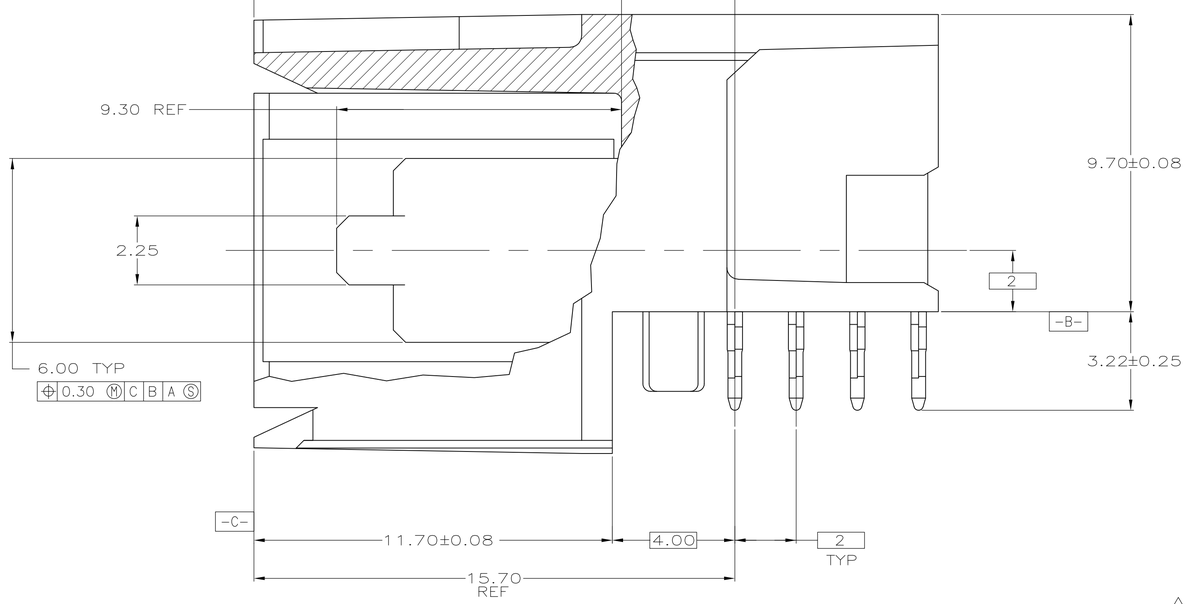

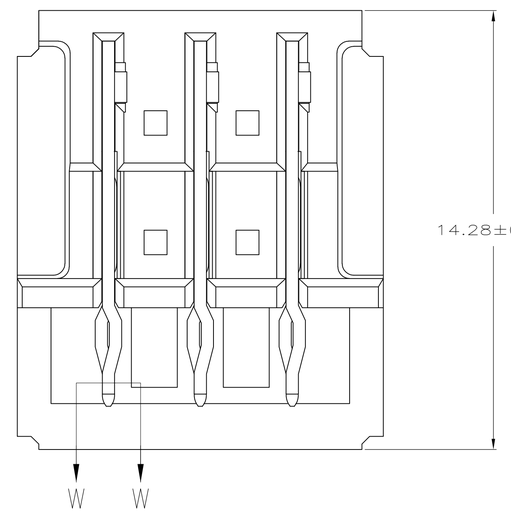

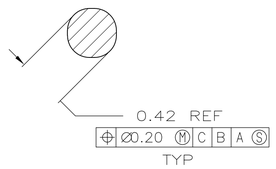

SECTION W-W
SCALE 40:1

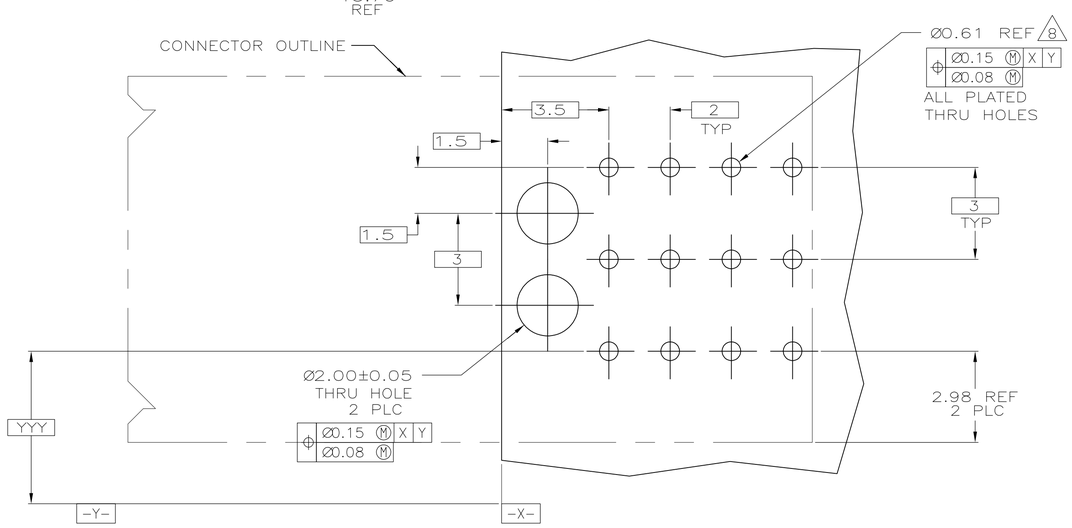

RECOMMENDED PCB HOLE LAYOUT

	FINISH	PART NUMBER
	2 3 7	5-223967-1
OBSOLETE	1 2 3 5	223967-9
10 OBSOLETE	6	~~223967-8~~
OBSOLETE	2 3 4	223967-4
	1 2 3	223967-1

THIS DRAWING IS A CONTROLLED DOCUMENT.

DIMENSIONS: mm

TOLERANCES UNLESS OTHERWISE SPECIFIED:
0 PLC ± -
1 PLC ± -
2 PLC ± 0.13
3 PLC ± -
4 PLC ± -
ANGLES ± -

MATERIAL 1 4
FINISH 2 3

DWN R.BUCHHEISTER 31/JAN/97
CHK R.ELICKER 31/JAN/97
APVD R.ELICKER 31/JAN/97
PRODUCT SPEC —
APPLICATION SPEC —
WEIGHT —

Tyco Electronics
Tyco Electronics Corporation
Harrisburg, PA 17105-3608

NAME ASSEMBLY, RIGHT ANGLE HEADER, W/ RETENTION PEGS, UNIVERSAL POWER MODULE

SIZE	CAGE CODE	DRAWING NO	RESTRICTED TO
A1	00779	C-223967	—

CUSTOMER DRAWING SCALE 10:1 SHEET 1 OF 1 REV M

4805 (1/08)