used for: DIN EN 60603 TYPE "C 1/2"

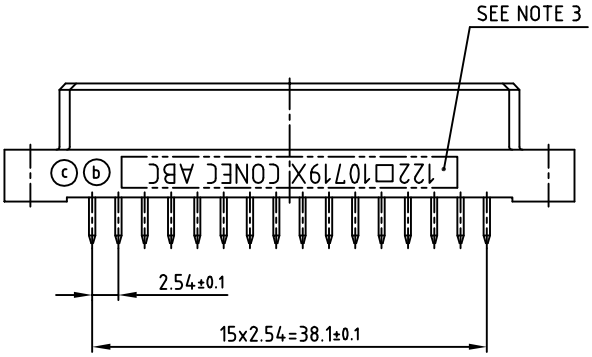

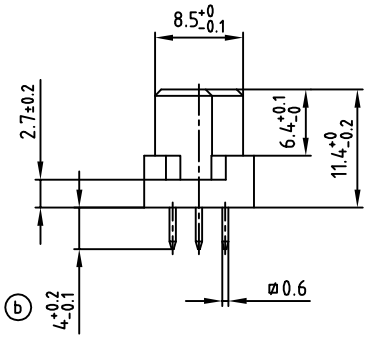

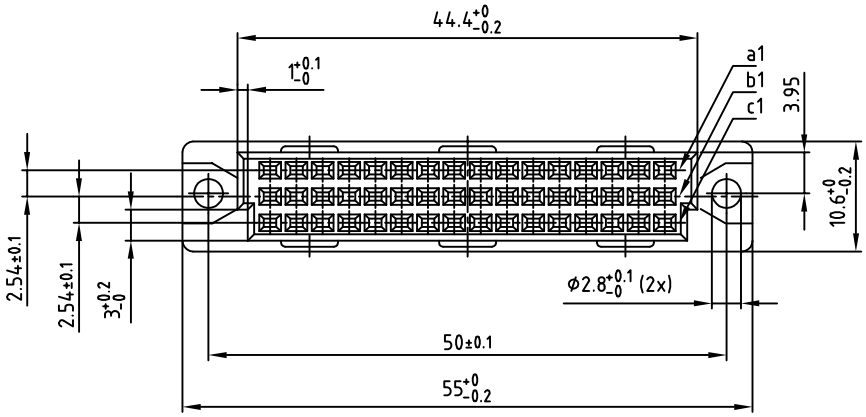

NOTES:

1. INSULATOR: PBT UL 94 V-0; GREY
ⓒ 2. CONTACTS: COPPER ALLOY; PLATING (SEE PART-NO.):
   - ☐ PLEASE ADD A FOR GOLD over NICKEL; 50 MATING CYCLES
   - ☐ PLEASE ADD B FOR GOLD over NICKEL; 400 MATING CYCLES
   - ☐ PLEASE ADD C FOR GOLD over NICKEL; 500 MATING CYCLES
3. CONNECTOR IS PART MARKED: 122□10719X CONEC ABC (see note 2)

P.C.B. HOLE DRILLINGS
(P.C.B. TOP SIDE)

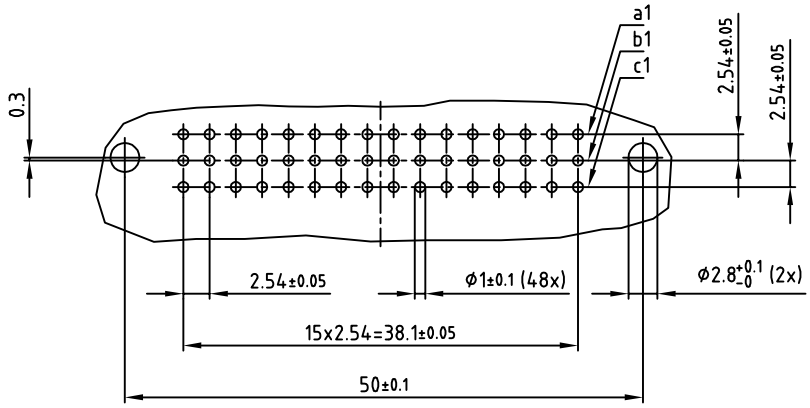

THIS DRAWING MAY NOT BE COPIED OR REPRODUCED IN ANY WAY, AND MAY NOT BE PASSED ON TO A THIRD PARTY WITHOUT WRITTEN PERMISSION. OWNERSHIP AND COPYRIGHT OF CONEC GmbH
DO NOT ALTER CAD DRAWING BY HAND

RoHS compliant

rev.	description	date	name
3 x c	Ä5776	21.08.2015	K.H.
2 x b	Ä3311	13.03.09	Petker
a	Original		

General tolerance — dim. in mm

	date	name
2004		
drawn	21.09.	Lehmenkühler
appd.	22.09.	Mickenbecker
norm	DIN EN 60603	
d-old		

CONEC®

scale: 2:1
material: SEE NOTES
title: FEMALE CONNECTOR TYPE "C 1/2"
48pos.
SOLDER PIN 4mm
dwg no: 12K1A321
DIN-A 3
sh: 1/1
part no: ⓒ 122□10719X (see note 2)