THIS DRAWING IS UNPUBLISHED. RELEASED FOR PUBLICATION -,- .
© COPYRIGHT - BY TYCO ELECTRONICS CORPORATION. ALL RIGHTS RESERVED.

LOC	DIST
A	66

REVISIONS

P	LTR	DESCRIPTION	DATE	DWN	APVD
	F	ECR-15-000123	JAN2015	RS	LZ

PART NUMBER	REV	FIRST USED	TERMINATOR	FEED TYPE	DESCRIPTION
1528030-1	F	-	LEADMAKER	MECH POST FEED	CUTS CARRIER
1528030-2	F	-	BENCH	MECH PRE FEED	CUTS CARRIER
1528030-6	F	-	LEADMAKER	MECH POST FEED	CONTINUOUS CARRIER
7-1528030-1	F	-	LEADMAKER	MECH POST FEED	-1 AND SPARE PARTS
7-1528030-2	F	-	BENCH	MECH PRE FEED	-2 AND SPARE PARTS
7-1528030-6	F	-	LEADMAKER	MECH POST FEED	-6 AND SPARE PARTS
7-1528030-7	A	-	-	-	SPARE PARTS KIT

CRIMP DATA PACKARD TERMINAL AMP CRIMP SPECS

TERMINAL NAME: TAXI TERM M GT 150 SLD △4

CRIMP	SIZE	TYPE	RANGE
WIRE	1.57 [.062 IN]	F	0.50mm²
INSUL	3.56 [.140 IN]	0	1.20-1.85 [.047-.073 IN]

WIRE STRIP LENGTH 4.80-5.60 [.189-.220 IN]

APPL INSTRUCTION 408-8322 & 408-8490

TERMINAL	-	-	FEED
APPL SPEC	114-3118	-	11.00 [.433 IN]

TERMINALS APPLIED

AMP PN	MFR PN	AMP SEAL PN	MFR PN	-
286969-1	15326268	286970-1	15366021	-
-	-	-	-	-
-	-	-	-	-
-	-	-	-	-
-	-	-	-	-
-	-	-	-	-
-	-	-	-	-

WIRE SIZE mm² AWG	CRIMP HEIGHT * △6	REF SETTING
0.50mm²	1.17 ±0.05 [.046 ±.002 IN]	C8
-	-	-
-	-	-
-	-	-
-	-	-
-	-	-
-	-	-
-	-	-
-	-	-
-	-	-
-	-	-
-	-	-
-	-	-
-	-	-
-	-	-

SET UP GAGE	LAYOUT
458637-3	L1528030

△1 RECOMMENDED SPARE PARTS.
2. GREASE RAM, CAM, CAM FOLLOWER AND FEED ROD LIGHTLY.
3. LUBRICATE DAILY PER THE APPLICATOR INSTRUCTION SHEET SUPPLIED WITH THE APPLICATOR.
△4 THIS APPLICATOR APPLIES TERMINAL WITH A SEAL.
△5 APPLY TORQ-SEAL IN ALLEN SOCKET TO FILL HOLE AFTER FLAT HD HAS BEEN ADJUSTED TO CORRECT HEIGHT AT QUALIFICATION. APPLY #1-23419-5 LOC-TITE TO THREADS.
△6 CRIMP DATA CALCULATED BY TYCO ELECTRONICS.

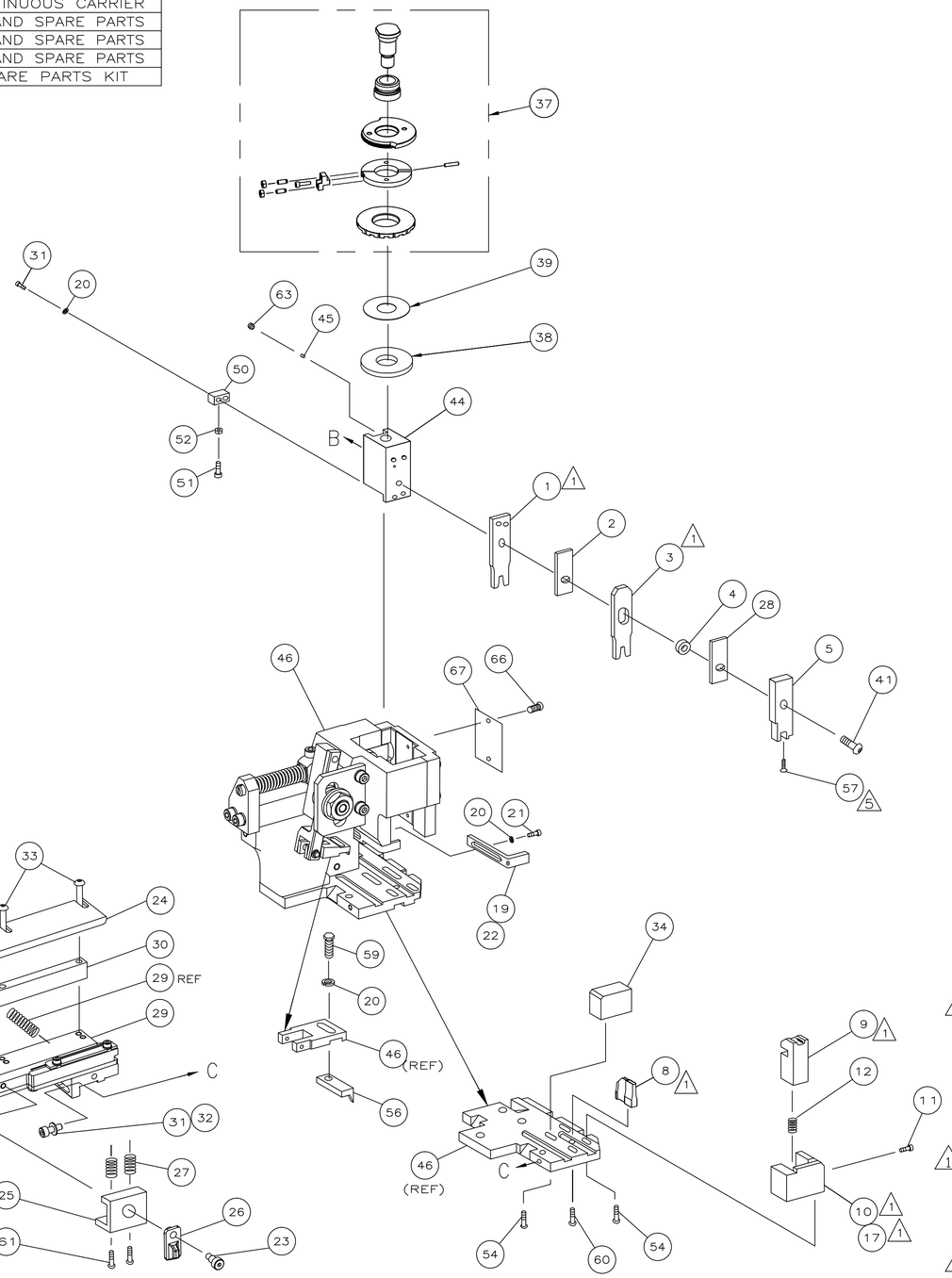

QTY REQD PER ASSY							PART NO	DESCRIPTION	ITEM NO
									73
	1	1	1	1	1	1	1528030	PRINT, APPLICATOR LOG SHEET	72
-	1	1	1	1	1	1	1338705-3	DOCUMENTATION PACKAGE	71
									70
									69
									68
-	1	1	1	1	1	1	461264-5	PLATE, IDENTIFICATION	67
-	2	2	2	2	2	2	21017-2	SCR,DRIVE(#2x.19)ID PLATE	66
									65
									64
-	1	1	1	1	1	1	3-18031-0	SCR,SKT SET(M6X6)RAM	63
									62
-	2	2	2	2	2	2	1-18024-5	SCR,BHC(M5X25)DRAG	61
-	1	1	1	1	1	1	18024-7	SCR,BHC(M4X10)ANVIL	60
-	1	1	1	1	1	1	5-18022-2	SCR,HEX(M4X8)FEED FINGER	59
									58
-	1	1	1	1	1	1	985575-3	SCR,FHC(M3X10)DEP	57
-	1	1	1	1	1	1	1338685-1	PAWL, FEED	56
									55
-	4	4	4	4	4	4	18024-8	SCR,BHC(M4x12)SHEAR HOLDER	54
									53
-	1	1	1	1	1	1	18030-1	NUT,HEX(M3)HOLD DOWN	52
-	1	1	1	1	1	1	811242-5	BUMPER, HOLDDOWN	51
-	1	1	1	1	1	1	690753-2	SPACER, TONKER	50
-	1	1	1	1	1	1	18024-3	SCR,BHC(M3X10)CAM	49
-	-	1	-	-	1	-	1338675-1	CAM, PRE FEED 30 & 40 mm ST	48
-	1	-	1	1	-	1	1338676-1	CAM, POST FEED 30 & 40 mm ST	47
-	1	1	1	1	1	1	1320999-3	APPLICATOR BASIC SUBASSY	46
-	1	1	1	1	1	1	690191-1	PLUG, NYLON	45
-	1	1	1	1	1	1	1338660-1	RAM	44
									43
									42
-	1	1	1	1	1	1	2-18024-6	SCR,BHC(M8X25)RAM	41
									40
-	1	1	1	1	1	1	690125-1	SHIM SUBASSY	39
-	1	1	1	1	1	1	469367-8	SPACER, FINE ADJUST	38
-	1	1	1	1	1	1	879103-2	FINE ADJUST HEAD SUBASSY	37
									36
									35
-	1	1	1	1	1	1	1320934-1	SUPPORT, TERMINAL	34
-	2	2	2	2	2	2	1-18024-0	SCR,BHC(M4X20)STRIP GUIDE	33
-	1	1	1	1	1	1	18027-2	WASHER, FLAT(M4)	32
-	3	3	3	3	3	3	1-18023-2	SCR,SKT CAP(M4X12)MOUNT BLOCK	31
-	1	1	1	1	1	1	1320908-8	SPACER, STRIP GUIDE	30
-	1	1	1	1	1	1	1633073-1	STRIP GUIDE PLATE ASSY	29
-	1	1	1	1	1	1	455888-3	SPACER, CRIMPER	28
-	2	2	2	2	2	2	1-22284-0	SPRING, DRAG	27
-	1	1	1	1	1	1	356835-1	LEVER, DRAG RELEASE	26
-	1	1	1	1	1	1	240792-1	DRAG, TERMINAL	25
-	1	1	1	1	1	1	1320928-1	PLATE, STRIP GUIDE	24
-	1	1	1	1	1	1	980371-4	SCR,SHC SHLD	23
-	1	-	1	1	-	1	690472-2	STRIPPER	22
-	1	1	1	1	1	1	1-18023-1	SCR,SHC(M4X10)STRIPPER	21
-	4	4	4	4	4	4	18025-2	WASHER,LOCK(M4)STRIPPER	20
-	-	1	-	-	1	-	690472-1	STRIPPER	19
									18
△1 -	1	-	-	1	-	-	1338684-2	HOLDER, SHEAR, FRONT (NO-CUT)	17
									16
									15
									14
									13
-	1	1	1	1	1	1	5-22280-0	SPRING, SHEAR	12
-	1	1	1	1	1	1	356885-5	STOP, SHEAR	11
-	-	1	1	-	1	1	1-1320921-0	HOLDER, SHEAR, FRONT (CUT)	10
△1 -	1	1	1	1	1	1	318707-2	SHEAR, FLOAT (FRONT)	9
1	2	2	2	1	1	1	2-1333202-1	ANVIL	8
									7
									6
-	1	1	1	1	1	1	1338680-3	DEPRESSOR, SHEAR (FRONT)	5
-	1	1	1	1	1	1	238011-2	SPACER, BLOCK CRIMPER	4
△1 1	2	2	2	1	1	1	456135-6	CRIMPER, INSULATION	3
-	1	1	1	1	1	1	1-455888-3	SPACER, CRIMPER	2
△1 1	2	2	2	1	1	1	456403-4	CRIMPER, WIRE	1
-77	-76	-72	-71	-6	-2	-1			

PARTS LIST

VIEW B ROTATED 180°

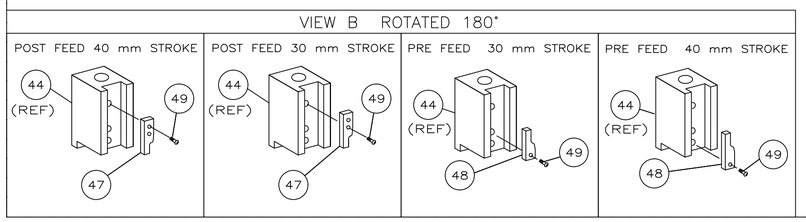

* WARNING:
ON INSTALLATION, SET WIRE DISC TO LARGEST WIRE SIZE SETTING. USE OF SETTINGS BELOW MIN REQ'D CRIMP HEIGHT SETTING WILL CAUSE DAMAGE TO CRIMP TOOLING.

THIS DRAWING IS A CONTROLLED DOCUMENT.

DIMENSIONS: INCHES

TOLERANCES UNLESS OTHERWISE SPECIFIED:
0 PLC ± -
1 PLC ± -
2 PLC ± 0.5 [.02 IN]
3 PLC ± -
4 PLC ± -
ANGLES ± -

MATERIAL -
FINISH -

DWN M.CLIFFORD 20JUN01
CHK -
APVD F.BACKHURST 20JUN01
PRODUCT SPEC -
APPLICATION SPEC -
WEIGHT -

TE CONNECTIVITY
Harrisburg, PA 17105-3608

NAME FINE ADJ SIDE FD HD-I APPL

SIZE	CAGE CODE	DRAWING NO	RESTRICTED TO
A1	00779	C-1528030	-

CUSTOMER DRAWING SCALE - SHEET 1 OF 1 REV F

AMP 4805 REV 31MAR2000

15MAY2007 11:23am