DRAWING MADE IN THIRD ANGLE PROJECTION

© COPYRIGHT 1964 BY AMP INCORPORATED, HARRISBURG, PA. ALL INTERNATIONAL RIGHTS RESERVED. AMP INCORPORATED PRODUCTS COVERED BY U. S. AND FOREIGN PATENTS AND/OR PATENTS PENDING.

LOC AF | DIST 5C

REVISIONS

P	F	ZONE	LTR	DESCRIPTION	DATE	APPROVED
			D	REDRAWN & REVISED A-3943	6-26-78	DTA SS
			E	ADDED -3 TTI	9-5-79	RLT RPF
			F	OBSOLETED -3 PER A-5398	4-15-82	RCS/ GY
			G	INSUL. SUPP. LENGTH AF-0781	2-20-85	RLT/ GY
			H	REVISED AF1994	7/1/86	SS/RPF

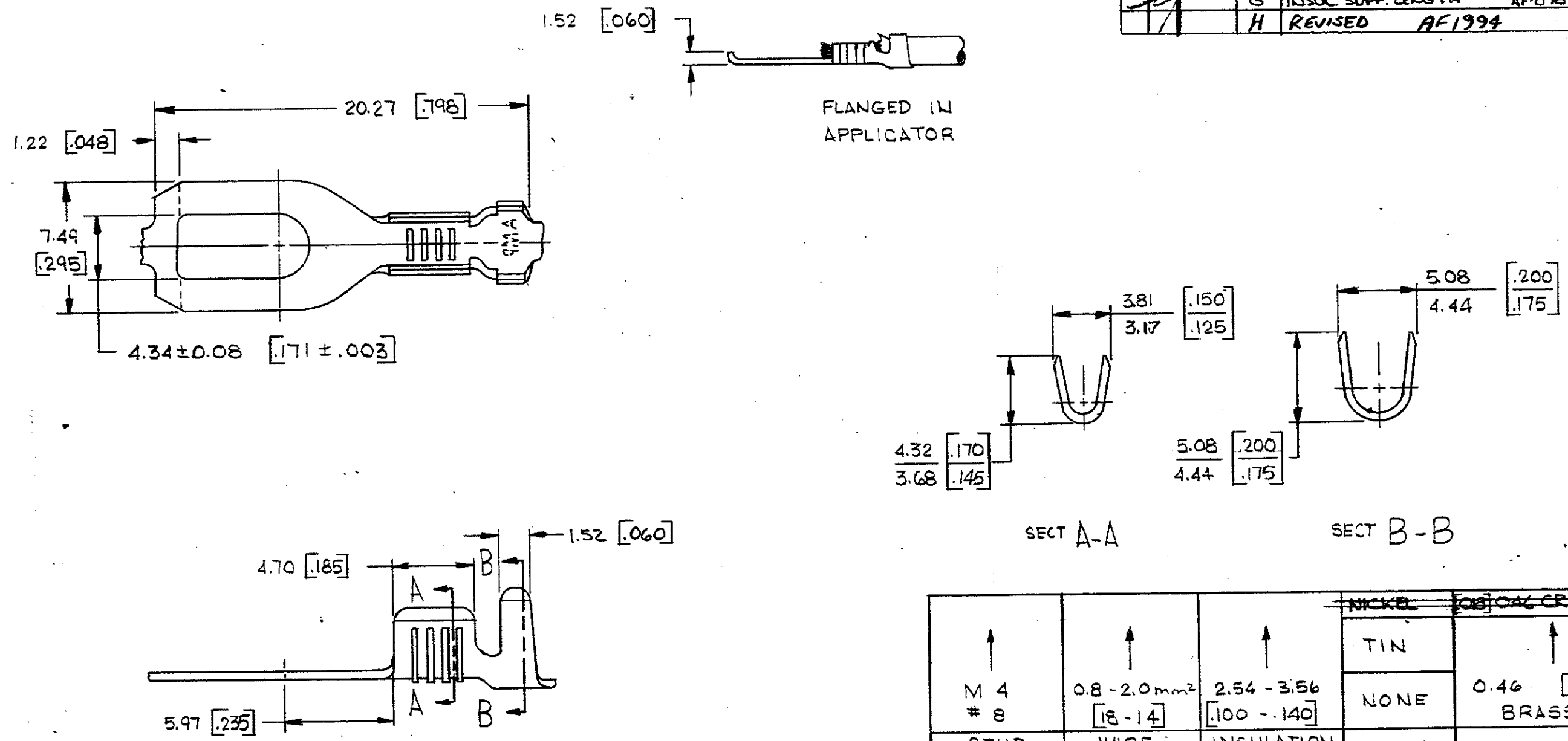

STUD SIZE	WIRE RANGE	INSULATION RANGE	FINISH	MATERIAL	PART NO
M 4 # 8	0.8 - 2.0 mm² [18 - 14]	2.54 - 3.56 [.100 - .140]	~~NICKEL~~	~~[.018] .046 CRS~~	~~60774-3~~
			TIN	0.46 [.018] BRASS	△3 60774-2A
					60774-2
			NONE		△3 60774-1A
					60774-1

1. CONTINUOUS STRIP ON REELS.
2. DIMENSIONS IN BRACKETS ARE IN INCHES.
3. △3 SUFFIX LETTER MUST BE USED ONLY WHEN ORDERING APPLICATOR TOOLING.

METRIC

UNLESS OTHERWISE SPECIFIED DIMENSIONS ARE IN mm
TOLERANCES ON: DECIMALS ±0.38 [.015] ANGLES ±1°-0'

MATERIAL: SEE TABLE

FINISH: SEE TABLE

CONTRACT NO
DR D. Adlon 6-26-78
CHK S. Schaffhauser 7-25-78
APPD R.P. Frantz 8-8-78
APPD G. Hicks 8-10-78
DSGN APPD
OTHER APPD

AMP INCORPORATED Harrisburg, Pa.

NAME: SPADE

SIZE: B | CODE IDENT NO: 00779 | DRAWING NO: 60774

SCALE ____ | SHEET

AMP 1470-15 (7-73)

CUSTOMER DRAWING