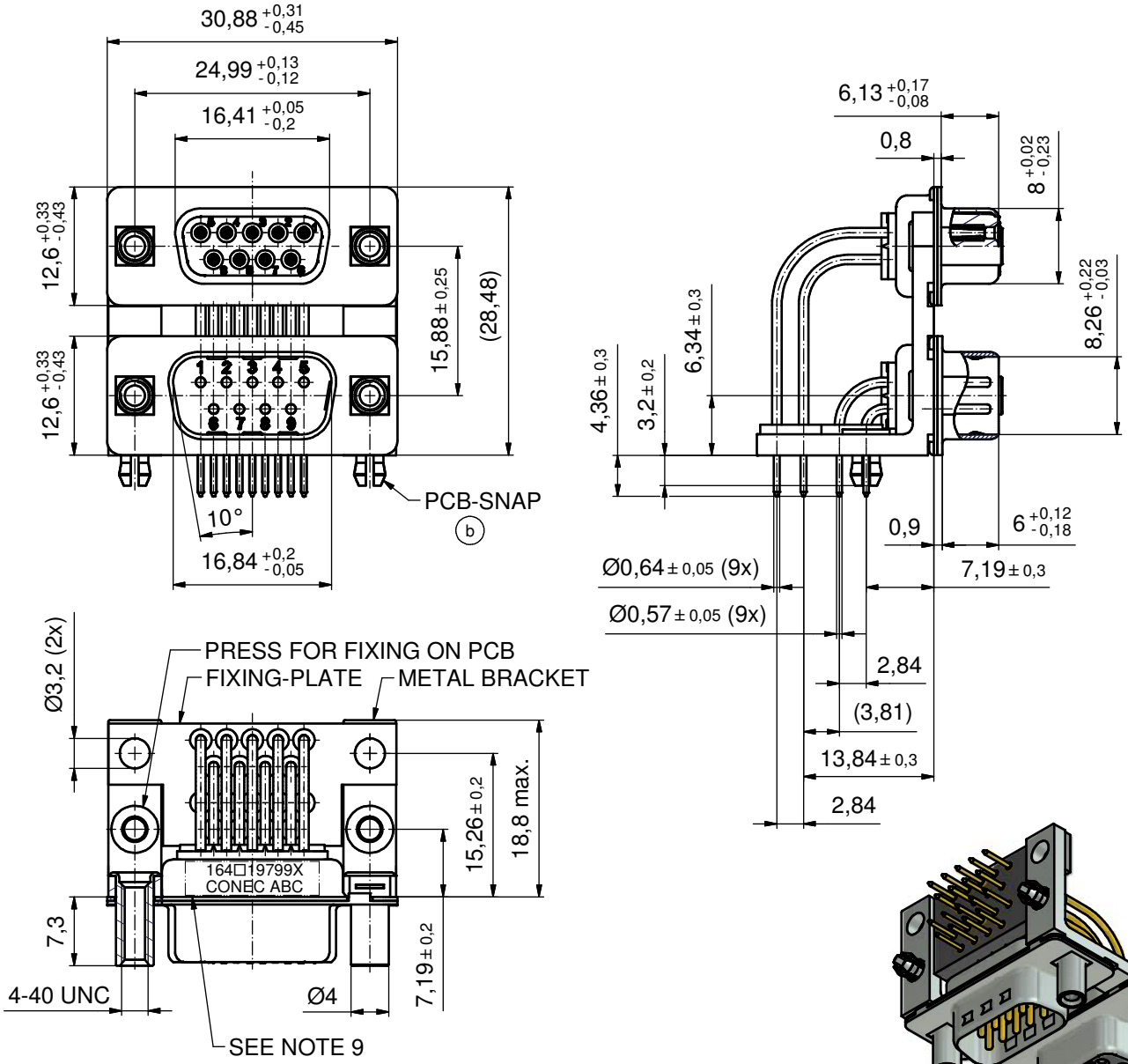

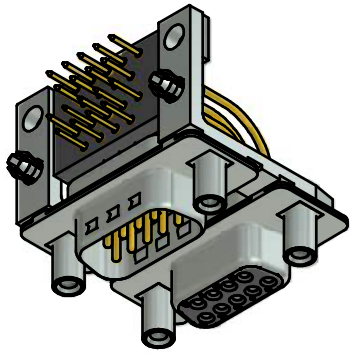

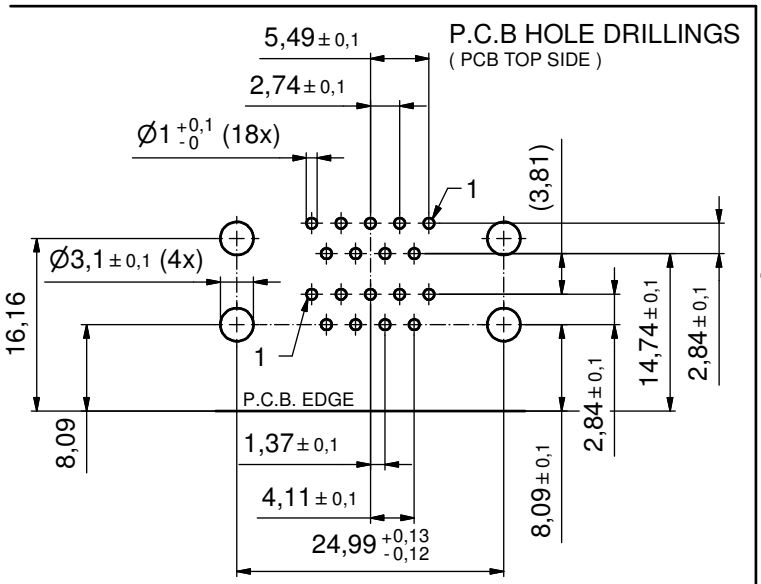

NOTES:

1. METALSHELLS: STEEL; min. 315µin TIN over 40-80µin NICKEL
2. INSULATORS: PBT GF UL 94 V-0, BLACK
3. CONTACTS: COPPER ALLOY; PLATING (SEE PART NO):
   b ☐ PLEASE ADD A for GOLD FLASH over NICKEL (PREFERRED TYPE)
   ☐ PLEASE ADD B for 20µin HARD GOLD over min. 50µin NICKEL
   ☐ PLEASE ADD C for 30µin HARD GOLD over min. 50µin NICKEL
4. METAL BRACKETS:
   ZINC DIE CAST; 300µin COPPER/40-120µin NICKEL/120-200µin TIN
5. THREADED LOCKS: COPPER ALLOY; min. 200µin TIN over 80µin NICKEL
6. FIXING PLATE: PBT GF UL 94 V-0, BLACK
7. PCB-SNAPS: COPPER ALLOY; min. 200µin TIN over 80µin NICKEL
   b PCB-HOLE: Ø3,1±0,1mm; PCB-THICKNESS: 1,6
8. MAXIMUM TORQUE VALUE FOR THREAD: 6 in.LB
9. CONNECTOR IS PART MARKET: 164□19799X CONEC ABC (see note 3)

Directive 2002/95/EC RoHS compliant

THIS DRAWING MAY NOT BE COPIED OR REPRODUCED IN ANY WAY, AND MAY NOT BE PASSED ON TO A THIRD PARTY WITHOUT WRITTEN PERMISSION. OWNERSHIP AND COPYRIGHT OF CONEC GmbH

DO NOT ALTER CAD DRAWING BY HAND

rev.	description	date	name
4 x b	Ä4610	16.01.2013	K.H.
a	Oiginal		

tolerance — dim. in mm

	date	name
drawn	16.01.13	Henneboel
appd.	17.01.13	Fischer
norm		
d-old	16K1A1762	

CONEC®

scale: 2:1
material: SEE NOTES

title:
D-SUB DUAL PORT 15.88mm
9pos. FEMALE / 9pos. MALE
threaded lock, metal bracket, fixing-plate and clip

dwg no: 16K1A3170
DIN-A3
sh: 1

part no: b 164□19799X (see note 3)