THIS COPY IS PROVIDED ON A RESTRICTED BASIS AND IS NOT TO BE USED IN ANY WAY DETRIMENTAL TO THE INTERESTS OF PANDUIT CORP.

NO WARRANTY, EXPRESSED OR IMPLIED, IS MADE BY PANDUIT WITH RESPECT TO ADHESIVE BOND PERFORMANCE. AMONG OTHER THINGS, THE CONDITIONS UNDER WHICH THESE MOUNTS MAY BE APPLIED AND/OR THE SURFACE TO WHICH THEY MAY BE APPLIED ARE BEYOND PANDUIT'S CONTROL.

PANDUIT PART NUMBER *	WEIGHT lbs. (g)/ 100 pcs.	STATIC LOAD ** lbs. (g)
FCC5-A	0.23 (105)	0.25 (117)

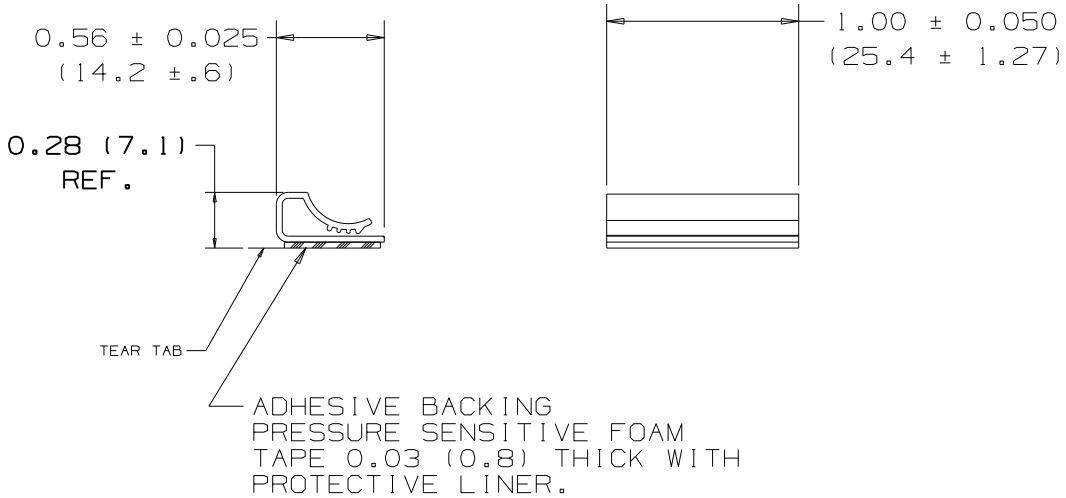

TO APPLY MOUNT:

1. REMOVE PROTECTIVE LINER.
2. PLACE IN DESIRED LOCATION.
3. APPLY PRESSURE TO TOP CENTER OF MOUNT.

NOTES:

* 1. SEE CURRENT PRICE SHEET FOR PART NUMBER SUFFIX DESIGNATION FOR PACKAGE SIZE.

** 2. MOUNT DESIGNED TO SUPPORT MAX. WEIGHT ON A CLEAN, DRY SMOOTH SURFACE.

(DIMENSIONS IN PARENTHESES ARE IN METRIC.)

CAD FILENAME/LAYERS G03597F0_DC_GB0239BI_REV_06

PANDUIT CORP. TINLEY PARK, ILLINOIS

FLAT CABLE CLIP, 1/2 IN. WIDE (FCC5-A)

UNLESS OTHERWISE SPECIFIED, DIMENSIONAL TOLERANCES ARE: (.X) ±0.1(2.5) ANGLES ±5°

UNLESS OTHERWISE SPECIFIED, ALL DIMENSIONS ARE GIVEN IN INCHES, THIRD ANGLE PROJECTION.

DRAWN BY SJSu | MAT'L: GRAY PVC | SCALE NONE

DATE 11-2-92 | DRAWING NO. GB0239BI | DWG A SIZE

CHK'D

REV	DATE	BY	CHK	DESCRIPTION	ECN - R	CUST	SUP
6	10-22-12	BWG		CHANGED OVERALL HEIGHT DIM TO REF.	GB0239BI 6		
5	4-15-05	TMSA		CHANGE DIM .290 TO .280 CHANGE TOL ON HEIGHT FROM ±.015 TO ±.020	GB0239BI 5		
4	6/9/04	JAD		CHANGE TOL ON CUT LENGTH FROM ±.035 TO ±.050	GB0239BI 4		
3	6/25/01	LGG		UPDATE FOR WEB	GB0239BI 3		
2	10-6-98	SJSu		Changed overall height from .260 to .290	GB0239BI 2		
1	2-16-94	SJSu		REVERSED TEAR TAB	GB0239BI 1		
R	11-2-92	SJSu		INITIAL RELEASE	GB0239BI R		