GardTec

Part Number:

SC100-W41

Material: C1008 Steel
Finish: Bright Nickel Chrome Plating
Ring Diameter: 1.2mm
Rib Diameter: 1.5mm
Disc T=0.8mm
General Tolerance Unless Noted: ±0.5mm
Unit: mm
RoHS/REACH Compliant

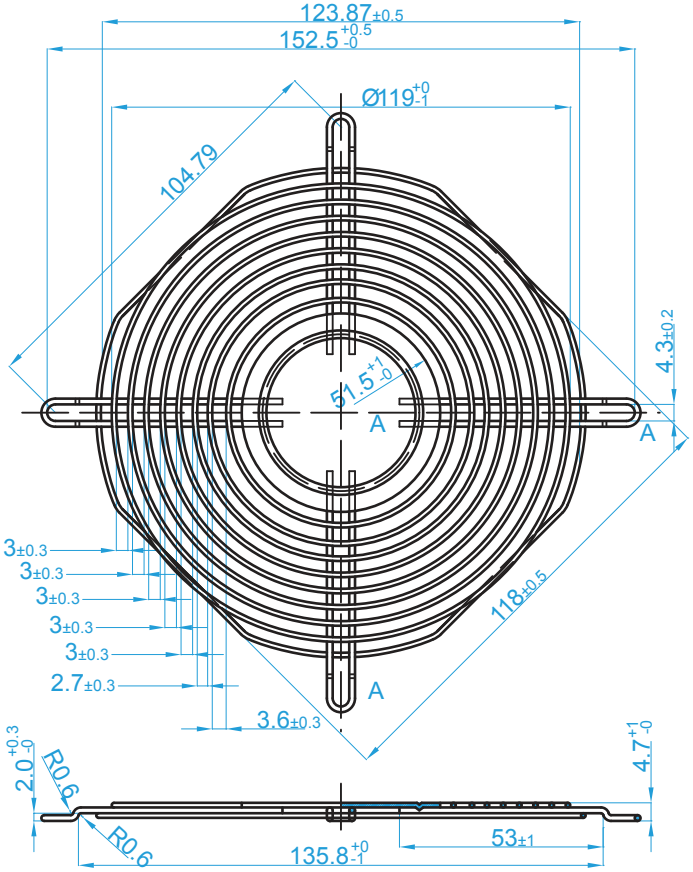

These drawings are the property of Gardtec,Inc and cannot be reproduced for or communicated to a third party without the express written permission of Gardtec,Inc.