Tous droits strictement reserves. Reproduction ou communication a des tiers interdite sous quelque forme que ce soit sans autorisation ecrite du proprietaire. Propriete de c FCI. Droits de reproduction FCI.

All rights strictly reserved. Reproduction or issue to third parties in any form whatever is not permitted without written authority from the proprietor. Property of FCI. Copyright FCI.

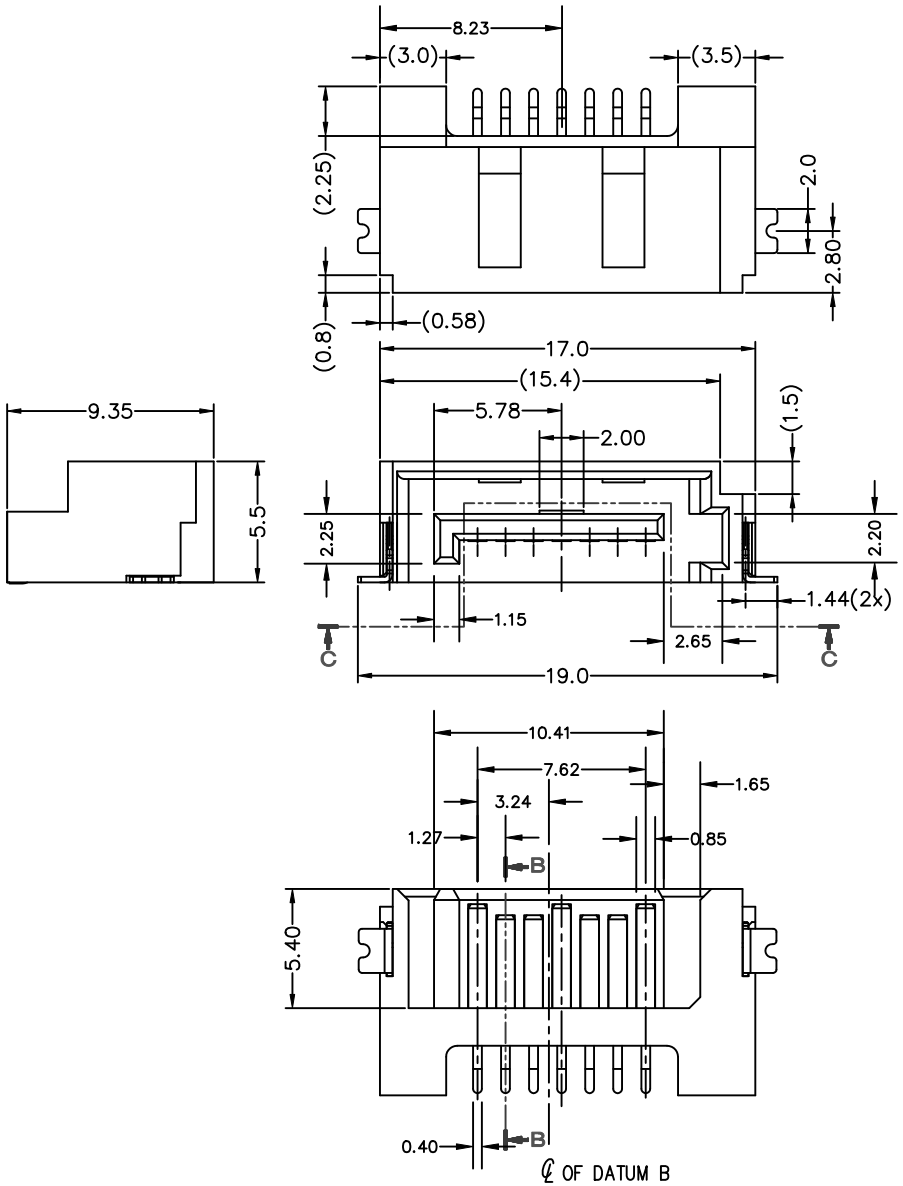

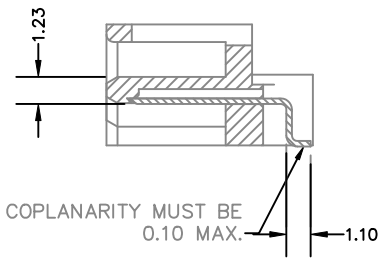

SEC. B-B

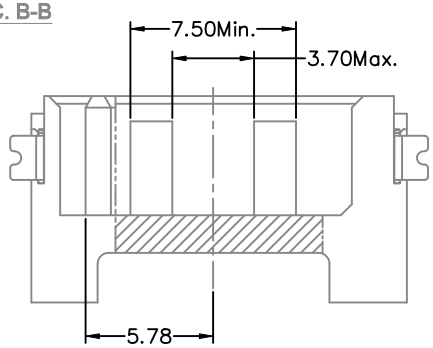

SEC. C-C

mat'l. code				tolerances unless otherwise specified			CUSTOMER COPY	FCI www.fciconnect.com	
ltr	ecn no	dr	date		.X ± 0.38				
A	T09-1051	S.LIN	04/10/09'	linear	.XX ± 0.25		projection	title S-ATA SIGNAL PLUG SMT RA TYPE ASS'Y	
					.XXX ± 0.10				
				angles	0° ±2°				
				dr	STERLING LIN	04/10/09'	MM	product family SATA	code TWN
				engr	STERLING LIN	04/10/09'		size A4 / dwg no 10096851	
				chr	GARY HSIEH	04/10/09'	scale NA		sheet 1 of
				appd	JOSEPH HSIA	04/10/09'			
sheet index	revision	A	A						
	sheet	1	2						

cage code

ACAD

STATUS: Released

PDM: Rev:A

Printed: Apr 16, 2009

NOTES :

1. MATERIAL
   - i) HOUSING : HIGH TEMPERATURE THERMOPLASTIC UL94V-0
   - ii) TERMINAL : COPPER ALLOY
   - iii) HOLD DOWN : COPPER ALLOY
2. FINISH
   - i) TERMINAL : Au PLATING AT CONTACT POINT
     MATT TIN PLATING 100u" MIN AT SOLDER TAIL WITH NICKEL 50u" MIN UNDERPLATE.
   - ii) HOLD DOWN : MATT TIN PLATING.
     MATT TIN PLATING 100u" MIN AT SOLDER TAIL WITH NICKEL 50u" MIN UNDERPLATE.
3. THE HOUSING WILL WITHSTAND EXPOSURE TO 260 DEGREE C PEAK TEMPERATURE FOR 10 SECONDS IN A CONVECTION, INFREA RED, OR VAPOR PHASE REFLOW OVEN.
4. Packaging spec. GS-14-840.
5. Prodcut Spec. GS-12-194.

10096851- 0 X X X LF

- LF: LEAD FREE
- X: PRODUCT SPEC: BLANK - SEE NOTE 5
- X: 1: G/F PLATING AT CONTACT
  2: 15U" GOLD AT CONTACT
  3: 30U" GOLD AT CONTACT
- 0: 0: T & R PACKING WITHOUT PICK UP CAP

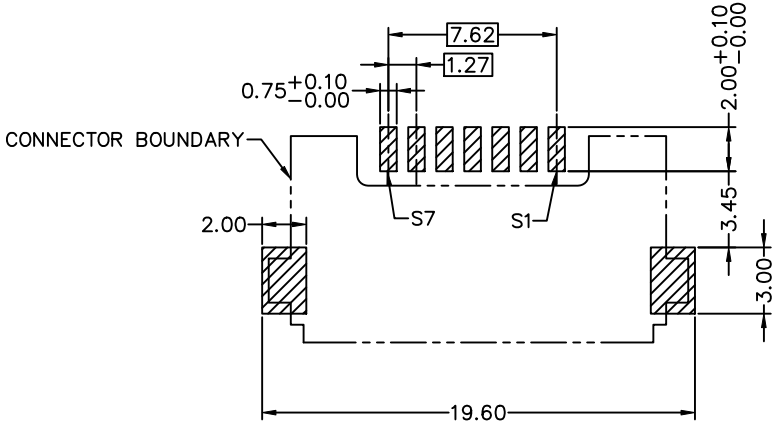

RECOMMENDED MOUNTING LAYOUT(PCB T: 1.6mm)
TOLERANCE UNLESS OTHER ±0.1mm

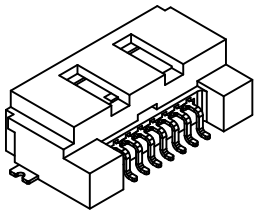

mat'l. code				tolerances unless otherwise specified			CUSTOMER COPY	FCI www.fciconnect.com
ltr	ecn no	dr	date	linear	.X ± 0.38		projection	title S-ATA SIGNAL PLUG SMT RA TYPE ASS'Y
A	T09-1051	S.LIN	04/10/09'		.XX ± 0.25			
					.XXX ± 0.10			
				angles	0° ±2°			
				dr	STERLING LIN	04/10/09'	MM	product family SATA / code TWN
				engr	STERLING LIN	04/10/09'		size A4 / dwg no 10096851
				chr	GARY HSIEH	04/10/09'	scale NA	sheet 2 of
				appd	JOSEPH HSIA	04/10/09'		
sheet index	revision	A	A					
	sheet	1	2					

cage code

ACAD

Tous droits strictement reserves. Reproduction ou communication a des tiers interdite sous quelque forme que ce soit sans autorisation ecrite du proprietaire. Propriete de c FCI. Droits de reproduction FCI.

All rights strictly reserved. Reproduction or issue to third parties in any form whatever is not permitted without written authority from the proprietor. Property of FCI. Copyright FCI.

Printed: Apr 16, 2009
STATUS: Released
PDM: Rev:A