THIS DRAWING IS UNPUBLISHED. RELEASED FOR PUBLICATION 1997
© COPYRIGHT 1997 BY - ALL RIGHTS RESERVED.

REVISIONS					
P	LTR	DESCRIPTION	DATE	DWN	APVD
	B6	REVISED PER ECR-17-014011	18JAN2018	SRG	MKO

PN 1-1

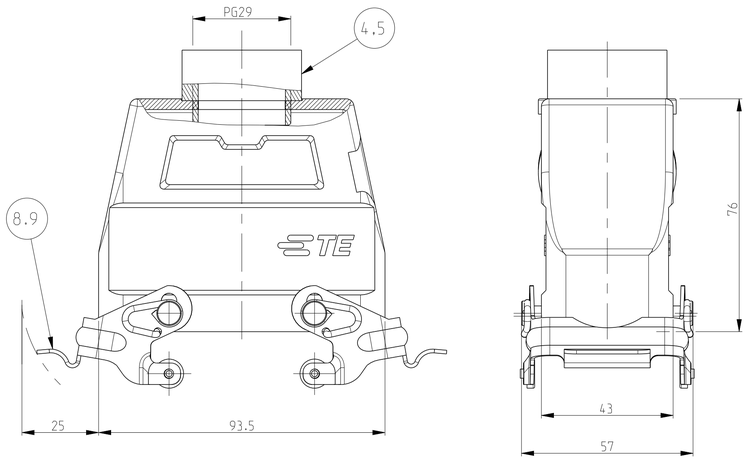

PN 1-6 & 7-6

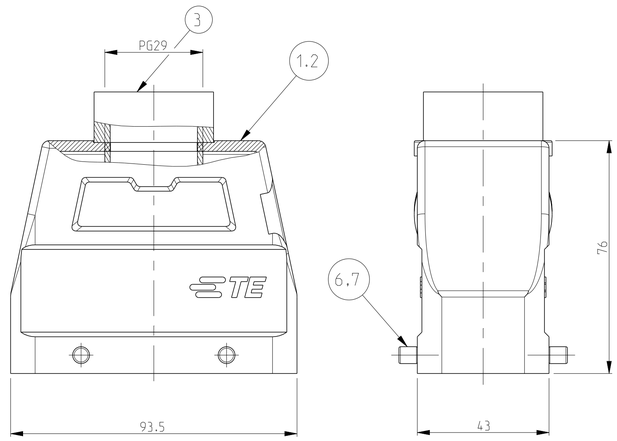

NOTES

1 Material: Housing: aluminium diecasting alloy

2 Surface:- Powder varnish :grey
:Black

3 Varnish on the inside not necessary

4 Packaging
quantity: 5 pieces

PN 1-7

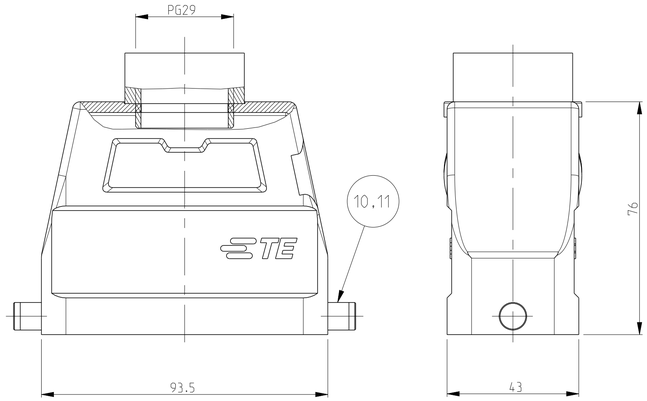

PN 1-7

SCALE 1:2

PN 1-1

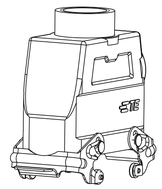

SCALE 1:2

PN 1-6 & 7-6

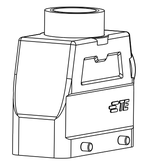

SCALE 1:2

OBSOLETE	OBSOLETE	OBSOLETE		OBSOLETE	OBSOLETE	OBSOLETE	DESCRIPTION	MATERIAL	SURFACE	COLOR	ITEM NO	NOTES
2							LB-clip bolt	Stainless steel	-	-	11	-
	2						LB-clip bolt	Steel	Zinc plated	Blue	10	-
		2					VS-side clip	Stainless steel	-	-	9	-
			2				VS-side clip	Steel	Zinc plated	Blue	8	-
				4			VS-Clip bolt	Stainless steel	-	-	7	-
					4	4	VS-Clip bolt	Steel	Zinc plated	Blue	6	-
1		1		1			O Ring Pg29	Neoprene	-	Black	5	-
1		1		1			Adapter 6kt Pg29	Brass	Nickel plated	-	4	-
	1		1		1	1	Adapter Pg29	Brass	Nickel plated	-	3	-
1		1		1	1		Hood HD.40.Pg.1.29	Aluminium	-	Black	2	-
	1		1			1	Hood HD.40.Pg.1.29	Aluminium	-	Grey	1	-
2-7	1-7	2-1	1-1	2-6	7-6	1-6	ORDERING TEXT					

HD.40.Sto 1.29.Z

HD.40.Sto 1.29.Z.So

HD K40.Sto 1.29.Z

HD.40.Sto-VS.1.29.Z

HD K40.Sto VS.1.29.Z

HD.40.Sto-GR.1.29.Z

HD K40.Sto GR.1.29.Z

THIS DRAWING IS A CONTROLLED DOCUMENT.

DIMENSIONS: mm

TOLERANCES UNLESS OTHERWISE SPECIFIED:
0 PLC ±
1 PLC ±
2 PLC ±
3 PLC ±
4 PLC ±
ANGLES ±

MATERIAL

FINISH

DWN Gröf 12.11.1997
CHK Kramer 23.06.98
APVD -
PRODUCT SPEC -
APPLICATION SPEC -
WEIGHT -

TE Connectivity

NAME HOOD HD.40
HD.40.STO.1.29.Z

SIZE A1 | CAGE CODE 00779 | DRAWING NO C-1102572 | RESTRICTED TO

CUSTOMER DRAWING | SCALE 1:1 | SHEET 1 OF 1 | REV B6

4805 (3/13)