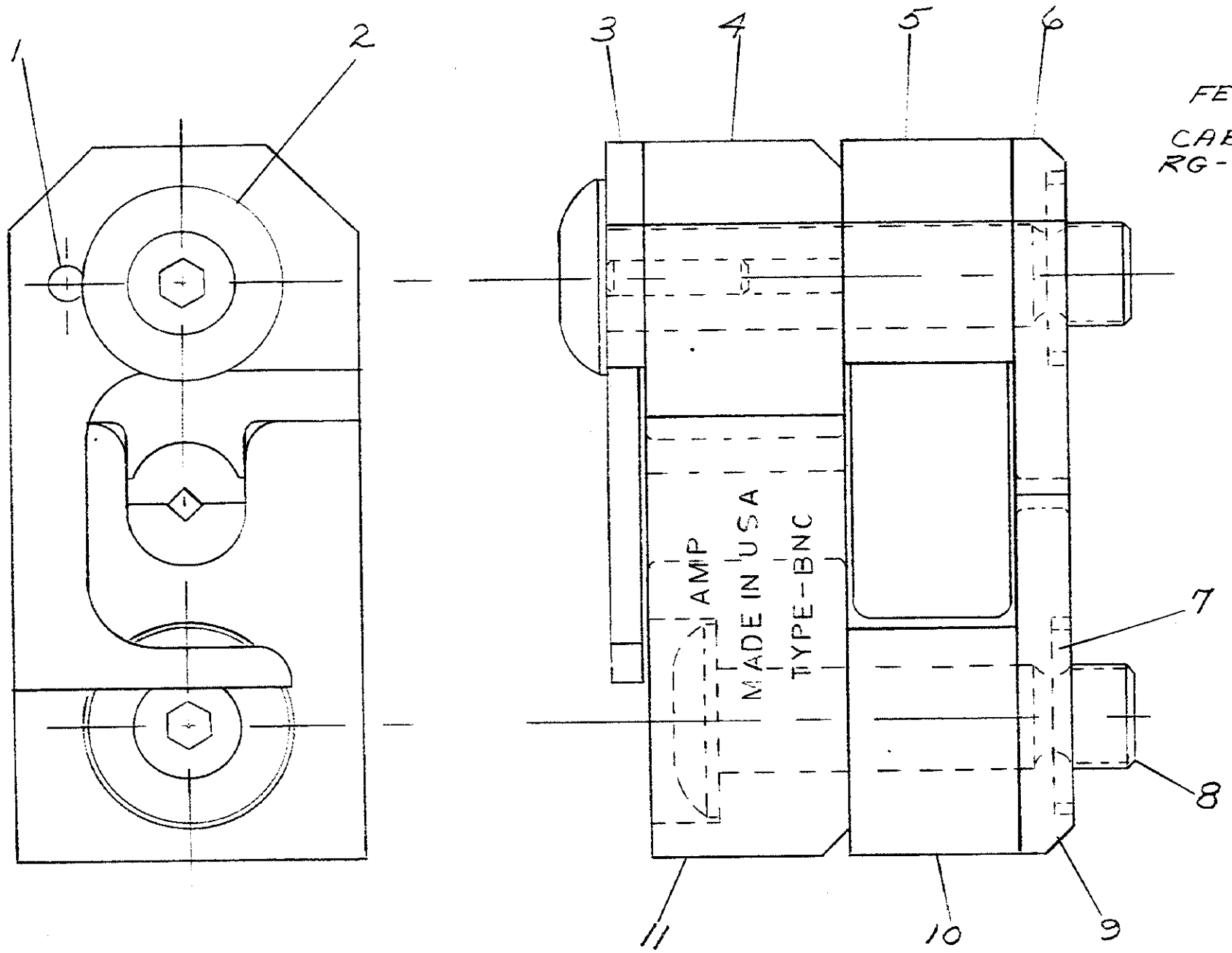


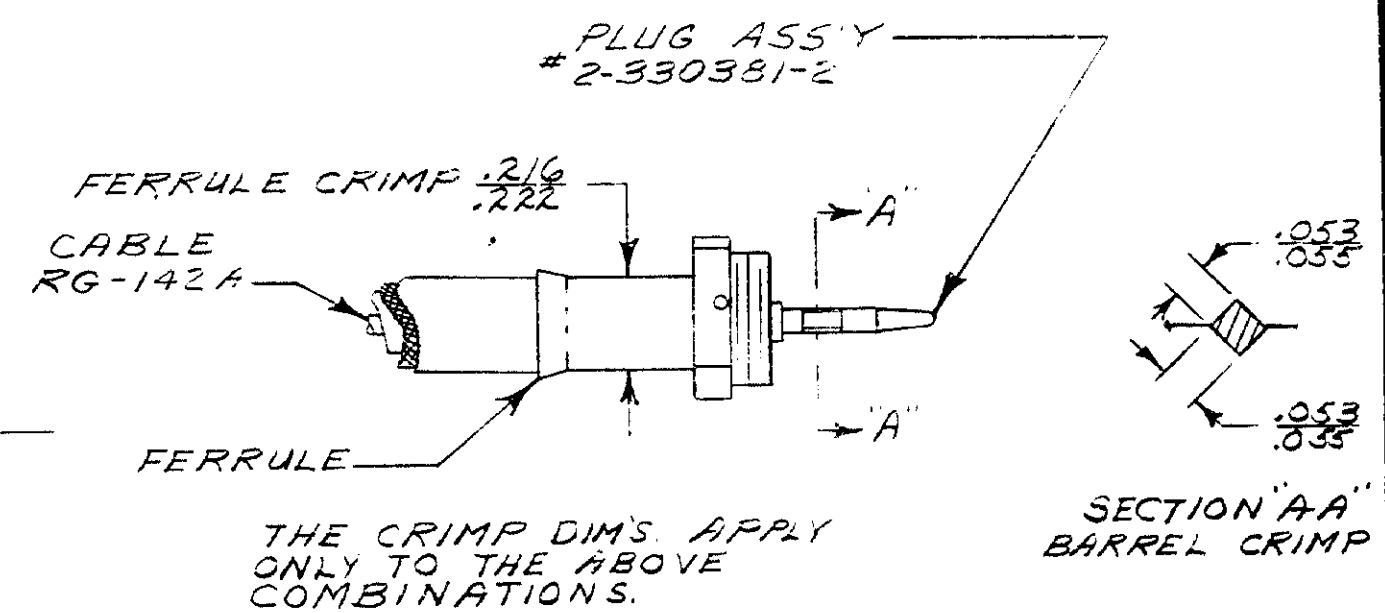


METHOD OF GAGING CRIMP DIM'S.

**SUPERSEDED BY** I.S. 2496

| | | | | |
|---|---|---|---|---|
| 1 | B | 306205-5 | INDENTER-INSULATION | 11 |
| 1 | A | 5-305832-2 | SPACER | 10 |
| 1 | B | 306207-3 | INSERT-BARREL-LOWER | 9 |
| 1 | A | 7-306105-8 | SCREW-SPECIAL | 8 |
| 2 | - | 1-21046-3 | RETAINING RING | 7 |
| 1 | B | 306208-5 | INSERT-BARREL-UPPER | 6 |
| 1 | A | 5-305832-1 | SPACER-SPECIAL | 5 |
| 1 | B | 306206-5 | ANVIL-INSULATION | 4 |
| 1 | A | 1-306113-2 | EJECTOR | 3 |
| 1 | A | 4-306131-2 | SCREW-SPECIAL | 2 |
| 1 | - | 21028-2 | PIN | 1 |
| -/- | DWG SIZE | NUMBER | NAME | REMARKS | ITEM NO |

REQUIRED PER ASSEMBLY

DESCRIPTION

| LTR | REVISION RECORD | DR | CHK | DATE |
|---|---|---|---|---|
| B | SUP. BY I.S. 2496 | GJF | GJF | 8-7-74 |
| A | REVISED | B.S. | | 8-7-67 |

NUMBER 69429-1

©1964 BY AMP INCORPORATED. ALL RIGHTS RESERVED.
AMP PRODUCTS COVERED BY PATENTS AND/OR PATENTS PENDING.

**CUSTOMER COPY REFERENCE ONLY**

DR C. Moyer 10-21-63
CHK
DE
APP

MATERIAL AND FINISH —//—
WIRE-RANGE-INSULATION RG-142A —//—
TOLERANCE EXCEPT AS NOTED ± .015 ± 1° 0'
SCALE 4~1

AMP INCORPORATED HARRISBURG, PENNA

CLASS —//—
TYPE BNC-COAX.
LOC M B NO 69429-1 REV B

NAME DIE ASS'Y

DIMENSIONS IN INCHES. DO NOT SCALE PRINT.

PRINT DIST 18 | 18

AMP 1253 REV 7/60 8