THIS DRAWING IS UNPUBLISHED. RELEASED FOR PUBLICATION 20
© COPYRIGHT 20 BY TYCO ELECTRONICS CORPORATION. ALL RIGHTS RESERVED.

PART NUMBER	REV	FIRST USED	POWER UNIT	FEED TYPE	DESCRIPTION
1852572-1	A	122500-1	LEADMAKER	AIR FEED	CUTS CARRIER
1852572-2	A	565435-5	BENCH MODEL K	AIR FEED	CUTS CARRIER
1852572-3	A	354500-1	BENCH MODEL G	AIR FEED	CUTS CARRIER
1852572-6	A	122500-1	LEADMAKER	AIR FEED	CONTINUOUS CARRIER
7-1852572-7	A	-	-	-	SPARE PARTS

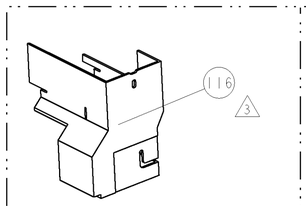

AMP-O-LECTRIC TERM GUARD

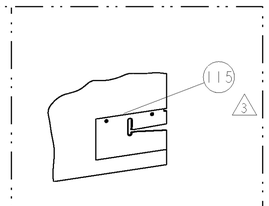

G TERMINATOR GUARD

TERMINAL NAME: TAXI TERM F M/P 280

AMP	PACKARD
1949274-1	12110645
-	-
-	-
-	-
-	-
-	-
-	-
-	-
-	-
WIRE STRIP LENGTH .219 -.250	TERM APPL SPEC NONE

PACKARD TERMINAL - AMP CRIMP SPECS

PAD LTR	CRIMP HEIGHT	WIRE SIZE
A	.062±.002[1.57±0.05mm]	16AWG 4
B	.059±.002[1.50±0.05mm]	1mm2
C	.056±.002[1.42±0.05mm]	18AWG or 0.8mm2
D	-	-

CRIMP	SIZE	TYPE	RANGE
WIRE	.100 [2.54mm]	F	18-16 AWG
INSUL	.155 [3.94mm]	F	Ø.077-.104

FEED	APPLICATOR INSTRUCTIONS	SET UP GAGE
.640	408-8040	458637-1

1 RECOMMENDED SPARE PARTS

2 GREASE LIGHTLY

3 GUARD MUST BE IN PLACE WHEN OPERATING APPLICATOR IN A BENCH MACHINE

4 16 AWG NOT RECOMMENDED BY PACKARD FOR THIS TERMINAL.

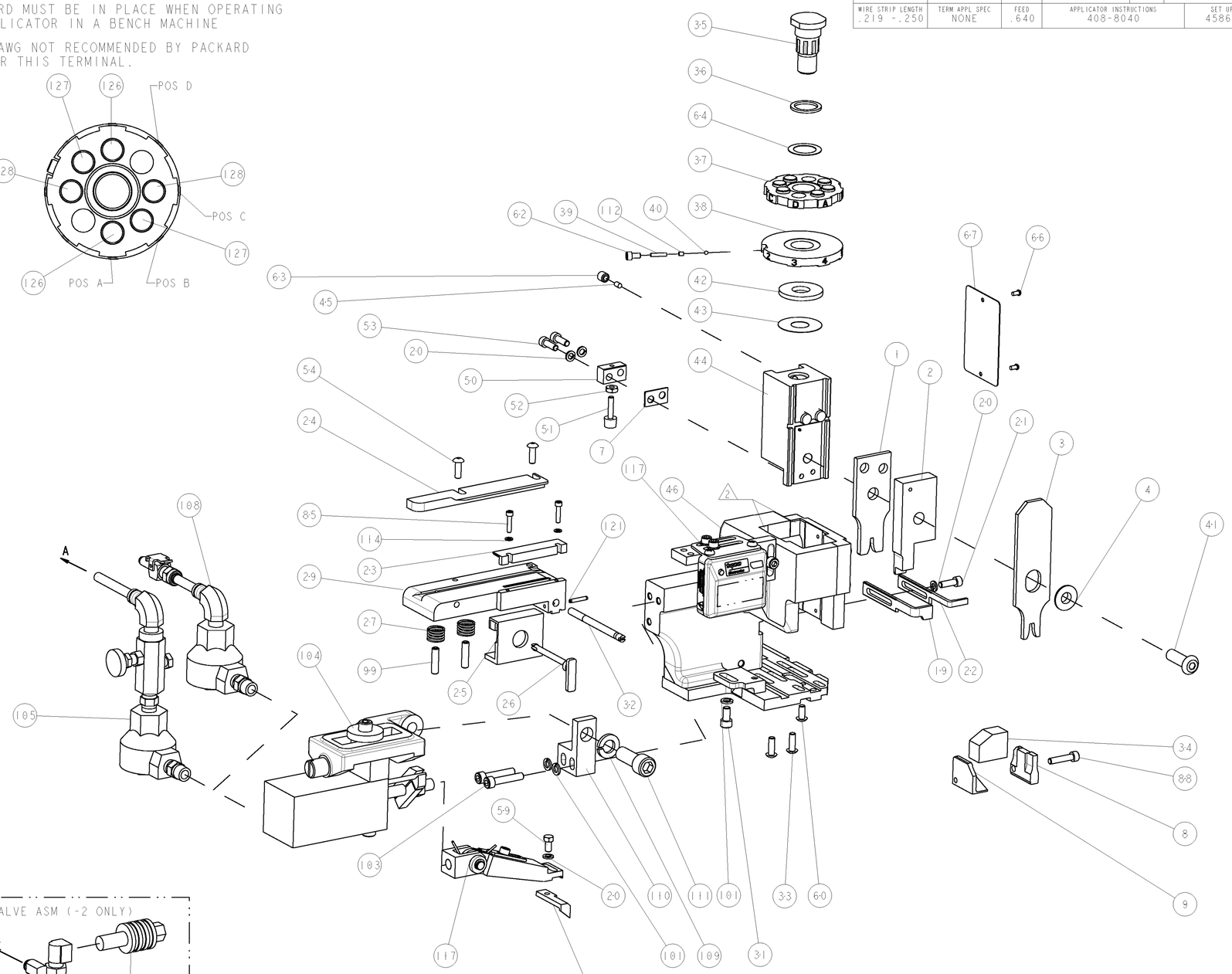

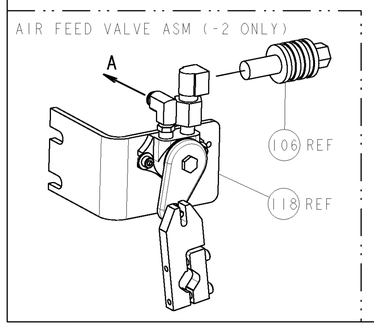

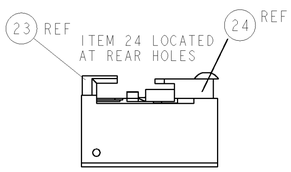

FEED TRACK POSITION

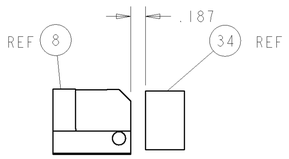

TERMINAL SUPPORT LOCATION

LOC	DIST
A	66

REVISIONS

P	LTR	DESCRIPTION	DATE	DWN	APVD
	A	PRODUCT RELEASE	NOV2007	CMR	TE
	A1	REMOVED FINE ADJ FROM DWG NAME	JAN2008	CMR	ND

-77	-6	-3	-2	-1	U/M	PART NO	DESCRIPTION	ITEM NO
-	2	2	2	2	-	2-354779-4	PIN, WIRE DISC, .3110	128
-	2	2	2	2	-	1-354779-6	PIN, WIRE DISC, .3070	127
-	2	2	2	2	-	354779-9	PIN, WIRE DISC, .3035	126
-	1	1	1	1	-	3-21028-7	PIN, SLOTTED SPRING .094 X .562	121
-	-	-	REF	-	-	692655-6	AIR FEED VALVE ASSEMBLY	118
-	1	1	1	1	-	461062-1	FEED FINGER ASSEMBLY	117
3	-	-	-	REF	-	.. 455749-1	GUARD WINDOW	116
3	-	-	REF	-	-	.. 679532-1	INSERT, GUARD	115
-	2	2	2	2	-	21024-2	WASHER, SPRG LOCK, REG NO 4	114
-	1	1	1	1	-	690603-1	SPRING ASSIST AMP-O-MATOR APPLICATOR	112
-	1	1	1	1	-	3-21001-5	SCR, SKT HD CAP 3/8-16 X 1.000	111
-	1	1	1	1	-	459610-1	MOUNT, FEED BRACKET	110
-	1	1	1	1	-	21024-8	WASHER, SPRG LOCK, REG 3/8	109
-	1	1	-	1	-	692655-7	AIR FEED VALVE ASSEMBLY	108
-	-	-	REF	-	-	24024-2	VALVE, SHUT OFF	106
-	-	-	1	-	-	692655-5	AIR FEED VALVE ASSEMBLY	105
-	1	1	1	1	-	461065-1	ASSEMBLY, AIR FEED	104
-	2	2	2	2	-	3-21000-9	SCR, SKT HD CAP 10-32 X 1.000	103
-	3	3	3	3	-	21024-5	WASHER, SPRG LOCK, REG NO 10	101
-	2	2	2	2	-	5-21006-6	SCR, SET, CUP POINT 10-32 X .750	99
-	1	1	1	1	-	2-21000-9	SCR, SKT HD CAP 8-32 X .750	88
-	2	2	2	2	-	1-21000-5	SCR, SKT HD CAP 4-40 X .500	85
-	1	1	1	1	-	4088040	SF APPL INST 408-8040	72
-	1	1	1	1	-	217238-1	GENERAL INSTRUCTION PKG	71
-	1	1	1	1	-	461264-1	PLATE, IDENTIFICATION	67
-	2	2	2	2	-	21017-2	SCREW, DRIVE	66
-	1	1	1	1	-	986950-1	WASHER, FLAT PRECISION	64
-	1	1	1	1	-	21009-2	SCR, SET, SELF LOCKING 1/4-20 X .250	63
-	1	1	1	1	-	23030-1	SCR, SKT HD CAP 6-32 x .25	62
-	1	1	1	1	-	22733-8	SCR, BHSC, SELF-LOCKING, 8-32 X .375	60
-	1	1	1	1	-	2-22603-0	SCR, HEX HD CAP 8-32 X .312	59
-	1	1	1	1	-	3-694433-2	FEED PAWL	56
-	2	2	2	2	-	2-21002-2	SCR, BTN SKT HD CAP 8-32 X .500	54
-	2	2	2	2	-	2-21000-7	SCR, SKT HD CAP 8-32 X .500	53
-	1	1	1	1	-	21018-5	NUT, HEX, REG 6-32	52
-	1	1	1	1	-	811242-2	BUMPER, HOLD DOWN	51
-	1	1	1	1	-	690753-1	SPACER, TONKER	50
-	1	1	1	1	-	1633399-1	APPL., BASIC AIR FEED SUB ASSY	46
-	1	1	1	1	-	690191-1	PLUG,NYLON	45
-	1	1	1	1	-	2-819307-4	RAM, SIDE FEED	44
-	1	1	1	1	-	690125-1	SHIM SUB-ASSY	43
-	1	1	1	1	-	690124-1	WASHER, RAM (.115)	42
-	1	1	1	1	-	690686-2	CRIMPER, BOLT SPECIAL	41
-	1	1	1	1	-	23241-6	BALL, STEEL	40
-	1	1	1	1	-	690170-1	SPRING, COMPRESSION	39
-	1	1	1	1	-	690142-1	DISC, INSULATION	38
-	1	1	1	1	-	354777-1	WIRE DISC, ASSEMBLY	37
-	1	1	1	1	-	22480-5	SPRING, COMPRESSION	36
-	1	1	1	1	-	690212-1	POST, RAM	35
-	1	1	1	1	-	3-690786-3	TERMINAL SUPPORT	34
-	2	2	2	2	-	2-21002-2	SCR, BTN SKT HD CAP 8-32 X .500	33
-	1	1	1	1	-	690432-3	ADJUSTMENT SCREW	32
-	1	1	1	1	-	3-21000-4	SCR, SKT HD CAP 10-32 X .375	31
-	1	1	1	1	-	5-455671-2	PLATE,STRIP GUIDE	29
-	2	2	2	2	-	1-22284-0	SPRING, COMPRESSION	27
-	1	1	1	1	-	690546-1	LEVER, DRAG RELEASE	26
-	1	1	1	1	-	690754-7	DRAG, SPECIAL	25
-	1	1	1	1	-	1-690440-9	GUIDE, REAR STRIP	24
-	1	1	1	1	-	690712-9	FRONT STRIP GUIDE	23
-	1	-	-	1	-	690472-2	STRIPPER	22
-	1	1	1	1	-	2-21000-7	SCR, SKT HD CAP 8-32 X .500	21
-	4	4	4	4	-	21024-4	WASHER, SPRG LOCK, REG NO 8	20
-	-	1	1	-	-	691353-1	STRIPPER	19
1	-	1	1	1	-	853714-5	PLATE, REAR SHEAR	9
1	1	1	1	1	-	1214596-5	ANVIL, SPECIAL COMBINATION	8
-	1	1	1	1	-	1-240641-9	SPACER	7
-	1	1	1	1	-	238009-1	BLOCK, FL CRIMPER SPACER	4
1	1	1	1	1	-	3-456134-6	CRIMPER, INSULATION F PREMIUM	3
-	1	1	1	1	-	853720-5	BLADE, SLUG	2
1	1	1	1	1	-	2-456407-8	CRIMPER, WIRE PREMIUM	1

THIS DRAWING IS A CONTROLLED DOCUMENT FOR TYCO ELECTRONICS CORPORATION. IT IS SUBJECT TO CHANGE WITHOUT NOTICE. UNLESS OTHERWISE SPECIFIED, THE ORIGINATOR SHOULD BE CONTACTED FOR THE LATEST REVISION.

DWN 05OCT2007 C REICHELDERFER
CHK 05OCT2007 T.ELBIN
APVD 05OCT2007 T.BENCHOFF

DIMENSIONS: INCHES
TOLERANCES UNLESS OTHERWISE SPECIFIED: 0 PLC ±- ; 1 PLC ±0.1 ; 2 PLC ±0.01 ; 3 PLC ±0.001 ; 4 PLC ±0.0001 ; ANGLES ±-
MATERIAL - -
FINISH - -
PRODUCT SPEC -
APPLICATION SPEC -
WEIGHT -

tyco Electronics — Tyco Electronics, Harrisburg, PA 17105-3608

NAME: SIDE FEED HDM APPLICATOR

SIZE	CAGE CODE	DRAWING NO	RESTRICTED TO
A1	00779	C-1852572	-

CUSTOMER DRAWING — SCALE 3:5 — SHEET 1 OF 1 — REV A1

CUSTOMER VIEWABLE ASSEMBLY

AMP 4805 REV 31MAR2000

Pro/ENGINEER DRAWING