MICRO SWITCH
a Honeywell Division
FED.MFG.CODE 91929

SWITCH – BASIC

CATALOG LISTING
3BV12B016
LP-R1659

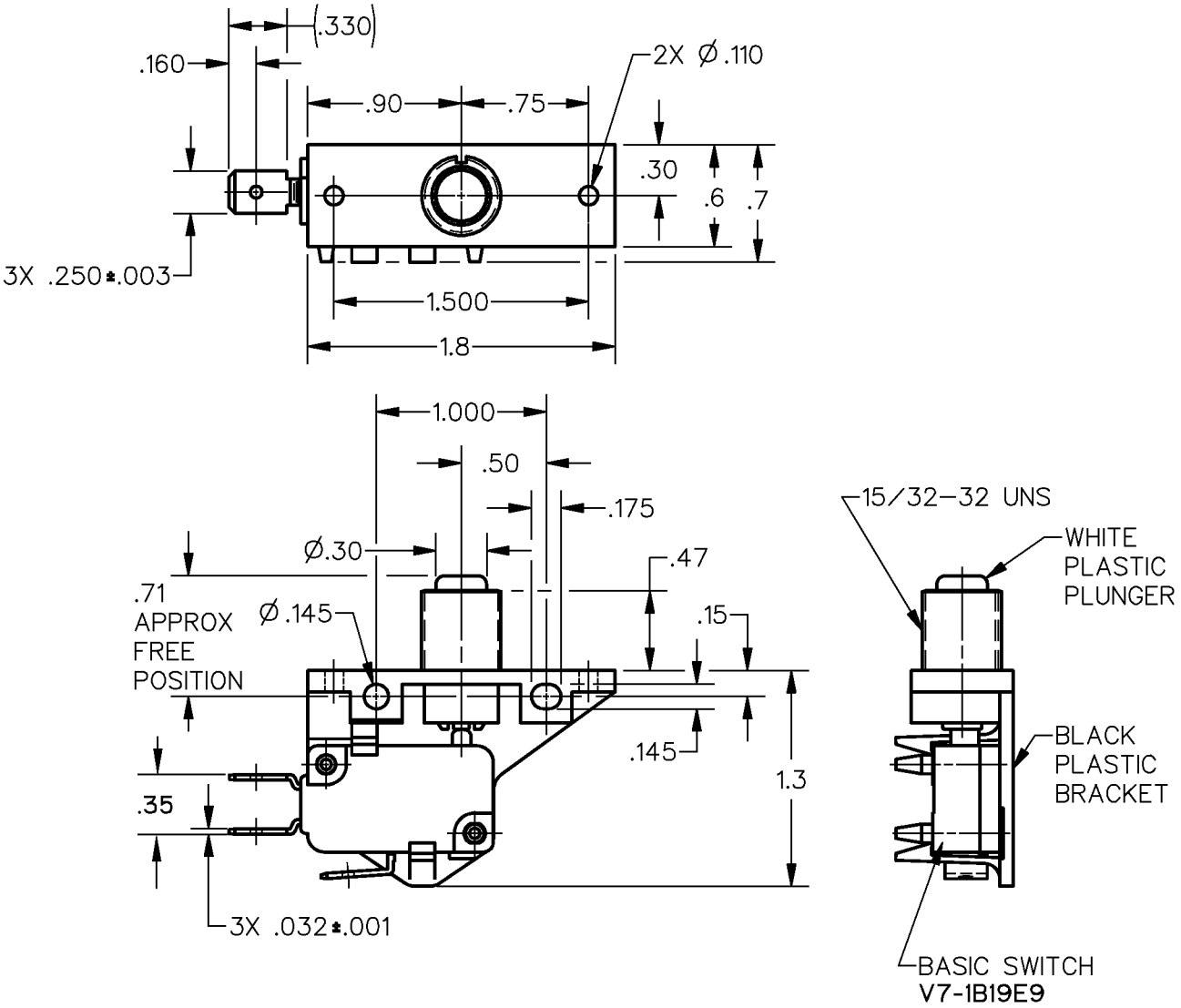

NOTE
1 – MARK BASIC SWITCH WITH **V7-1B19E9**

ANSI Y14.5M–1982 APPLIES

THIS DRAWING COVERS A PROPRIETARY ITEM AND IS THE PROPERTY OF MICRO SWITCH, A DIVISION OF HONEYWELL. THIS DRAWING IS NOT TO BE COPIED OR USED WITHOUT THE APPROVAL OF MICRO SWITCH.

THIRD ANGLE PROJECTION

CHARACTERISTICS	ELECTRICAL DATA	SCALE FULL — DO NOT SCALE PRINT
OPERATING FORCE——— 180 GRAMS MAX	CONTACT ARRANGEMENT SPDT	UNLESS OTHERWISE SPECIFIED TOLERANCES ARE
PRETRAVEL — — — — — — .052 MAX	L156 11A 1/3HP 125, 250 OR 277 VAC 1/2A 125 VDC, 1/4A 250 VDC 4A 125 VAC "L"	ONE PLACE (.0) ±.030 TWO PLACE (.00) ±.015 THREE PLACE (.000) ±.005 ANGLES ±
	10 (3) / 250 T85 1E5	WEIGHT

CATALOG LISTING	3BV12B016	
PAGE 1 OF 1	RELEASE NO. PR-24230	REPLACES
ISSUE 3		CHECK
REVISIONS		
A PR REL PR24230	J J A 23 AUG 99	
B 202161	C S L 15 JAN 01	
		CHECK
	23 AUG 99	
	J A F	CHECK
	9 FEB 99	
RASTER	DRAWN TSM	