SIGN	DATE	DESCRIPTION	APPROVER
1	2009.10.23	The design is changed	Jacke
2	2010.02.04	The material is changed from Brass to Copper	Jacke
3	2010.06.07	The flange screw is changed from"-" type to"+/-"type	Cheng Bo
		THIS IS CAD DRAWING, DO NOT REVISE MANUALLY!!!	

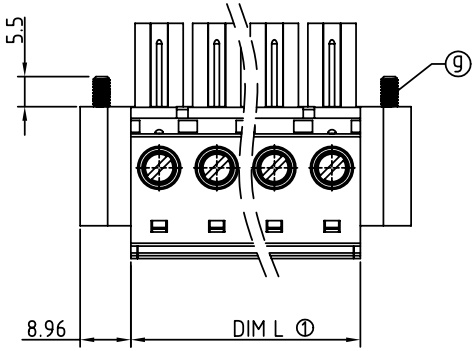

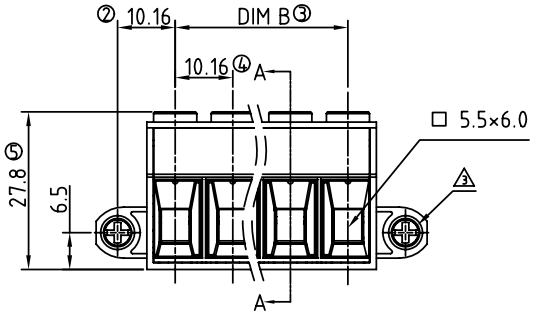

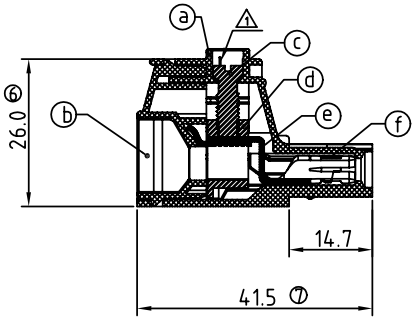

SECTION A-A

Material

- Item a Terminal body :Thermoplastic (UL94V-0)
- Item b Terminal cover:Thermoplastic (UL94V-0)
- Item c Terminal screw :Steel Cr3+ Zinc plating "-" slot type
- Item d Clamp: Brass, Ni plated
- 2 Item e Female contact :Copper Tin plated
- Item f Wire guard :Stainless Steel
- 3 Item g With flange screw :Steel Zinc plating M3"+/-"slot type

Electrical cULus / IEC

- Voltage rating: 300VAC / 1000VAC
- Current rating: 55A / 76A
- Solid wire: 6-20 / 0.5-16mm 2
- Stranded wire: 6-20 / 0.5-16mm2
- Torque: 10.4 Lb-In / 1.2 N.m
- Screw: M4.5
- Wire strip length: 13-14mm
- Withstanding Voltage: 1.6KV / 8KV
- Operating temperature: -40°C to +115°C
- Safety Approval: cULus

PART NO.

EV xx 61 x 1 xxxx G

RoHS
Pb<40,000ppm

Poles
02 2Contacts
03 3Contacts
.....
12 12Contacts

Color
0 Black (RAL9005)
2 Red (RAL3001/D)
3 Orange(RAL2011/P)
4 Yellow(RAL1018/A)
5 Green(RAL6018/T)
6 Blue (RAL5015/A)
8 Grey(RAL7035/D)

0000 Standard @ Logo
000A Standard ANY Logo
Any special item by customer request, please contact sales department.

Poles	02	03	04	05	06	07	08	09	10	11	12
Dim L	20.16	30.32	40.48	50.64	60.80	70.96	81.12	91.28	101.44	111.60	121.76
Dim B	10.16	20.32	30.48	40.64	50.80	60.96	71.12	81.28	91.44	101.60	111.76
TOL	±0.25					±0.35					

ANYTEK

CUSTOMER COPY

ALL RIGHTS RESERVED. REPRODUCTION OR ISSUE TO THIRD PARTIES IN ANY FORM WHATEVER IS NOT PERMITTED WITHOUT WRITTEN AUTHORITY FROM THE PROPRIETOR. PROPERTY OF ANYTEK TECHNOLOGY CO., LTD

TITLE	EV10.16 Series 2p-12p (W/F)					
PART NO.	EVxx61x1xxxxG			DWG NO.	8EV0002	
APPROVED	CHECKED	DESIGNED	DRAWN	CUST NO.		Tolerance
			Cheng Bo 2010.06.07		UNIT: mm	X. ±0.50
					SCALE: NONE	X.X ±0.30
				SHEET: 01/01	REV.: F	X.XX ±0.10
						X° ±1°